AGENDA
CITY COUNCIL MEETING
CITY OF LEANDER, TEXAS

Pat Bryson Municipal Hall
201 North Brushy Street - Leander, Texas
Thursday - January 19, 2023
Briefing Workshop at 6:00 PM
Regular Meeting at 7:00 PM

Mayor – Christine DeLisle	**Place 4 – Na'Cole Thompson, *Mayor Pro Tem***
Place 1 – Kathryn Pantalion-Parker	**Place 5 – Chris Czernek**
Place 2 – Esme Mattke Longoria	**Place 6 – Becki Ross**
Place 3 – David McDonald	**City Manager – Rick Beverlin**

The meeting will also be live-streamed at the following link: https://www.leandertx.gov/video.

BRIEFING WORKSHOP - CONVENE AT 6:00 PM

1. Open Meeting.

2. Roll Call.

3. Receive update on fiscal year 2023 capital improvement projects.

4. Discuss city regulation of carports.

REGULAR MEETING – CONVENE AT 7:00 PM

5. Open Meeting, Invocation and Pledges of Allegiance.

6. Roll Call.

7. Public comments on items not listed in the agenda.

   Public comments on items listed in the agenda will be heard at the time each item is discussed by Council.

   [All comments are limited to no more than 3 minutes (6 minutes if translation is needed) per individual.]

8. Leander History

9. Staff Reports
   - Public Works update

CONSENT AGENDA: ACTION

10. Approval of the minutes for meeting held on January 5, 2023.

11. Approval of renewal of an Interlocal Agreement between Willliamson County EMS and Leander Fire Department to meet the Department of State Health Services rule 157.14 regarding both the First Responder Organization and Medical Director agreements; and authorize the City Manager to execute any and all necessary documents.

12. Approval of an Interlocal Agreement between the City of Leander and Williamson County regarding the design and construction of N. Bagdad Road (CR 279), from the city limits of Liberty Hill to just south of CR 281 within the city limits of Leander, for the purpose of providing formal coordination and consent for the County's design and construction of the project within the city limits and requiring the City to maintain identified water quality features.

13. Approval of Task Order GBA-007 with George Butler Associates, Inc. for a citywide Wastewater Master Plan study in the amount of $551,936.00; and authorize the City Manager to execute any and all necessary documents.

14. Approval of extension of the application expiration for Subdivision Case 21-FP-006 Rosenbusch Ph 3 Final Plat; more particularly described by Williamson Central Appraisal District Parcel R599344; generally located to the east of the intersection of Vista Ridge Drive and Lakeline Boulevard; Leander, Williamson County, Texas.

15. Approval of Second Reading of an Ordinance regarding the B Twisted Annexation Case 22-A-005 regarding the voluntary annexation of 12.40 acres ± in size, more particularly described by Williamson Central Appraisal District Parcel R605507; and generally located approximately 3,000 feet to the west of intersection of Bagdad Road and CR 281, on the south side of CR 281, Leander, Williamson County, Texas.

16. Approval of Horizon Lake Phases 2 and 3 License Agreement, Case LA-22-0006, to allow for the installation and maintenance of landscaping and irrigation within portions of the right-of-way of Inlet Court and Horizon Park Boulevard, Leander, Williamson County, Texas; and authorize the City Manager to execute any and all necessary documents.

17. Approval of Development Agreement Case 22-DA-024 regarding the Prime Office Warehouse Development Agreement on one parcel of land approximately 8.34 acres ± in size, more particularly described by Williamson Central Appraisal District Parcel R031220; and commonly known as 15901 Ronald W. Reagan Boulevard, Leander, Williamson County, Texas.

REGULAR AGENDA

18. Discuss and consider action on Tree Removal Case TRP-22-0007 regarding removal of Significant and Heritage Trees associated with the Pedernales Electric Cooperative Hero Way Substation Site Development Project located at 13151 Hero Way West, Leander, Williamson County, Texas.

19. Discuss and consider action regarding Ordinance Case OR-21-0005 to amend City Code of Ordinances Chapter 13 Utilities to add provisions for development phasing; and to provide for related matters; Williamson & Travis Counties, Texas.

20. Council Member Future Agenda Items *[Any deliberation of or decision about the subject of the inquiry shall be limited to a proposal to place the subject on the agenda for a subsequent meeting.]*

21. Council Member Closing Statements.

22. Executive Session pursuant to:
1. Section 551.072 and 551.087, Texas Government Code Deliberate the purchase, exchange, lease, or value of real property and deliberate proposed economic development incentives for one or more business prospects that the governmental body seeks to have locate, stay, or expand in or near the territory of the governmental body is conducting economic development negotiations related to the following project(s):

- Project Cutting Edge;
- Project Ride or Die; and
- Project Orange Build.

2. Section 551.072, Texas Government Code, to deliberate the acquisition of real property located in Elijah D. Harmon Survey, Abstract 6, Williamson County, Texas, to grant a drainage easement and acquire the fee simple property rights for the purpose of the Raider Way/East Woodview roadway improvement project (CIP T.12).

3. Section 551.072, Texas Government Code, to deliberate the acquisition of real property located in Block 6, Town of Leander Survey, Williamson County, Texas, to grant a temporary construction easement and acquire the fee simple property rights for the purpose of the Downtown Leander Fire improvement project (CIP W.22).

Reconvene into open session to take action as deemed appropriate in the City Council's discretion regarding:
1. Economic Development lease, exchange or value of real property, incentives and approving one or more 380 Agreements for the listed projects.:

- Cutting Edge;
- Ride or Die; and
- Orange Build

2. Raider Way/East Woodview roadway improvement project (CIP T.12)

3. Downtown Leander Fire improvement project (CIP W.22)

23. Adjournment

CERTIFICATION
This meeting will be conducted pursuant to the Texas Government Code Section 55 1.001 et seq. At any time during the meeting the Council reserves the right to adjourn into Executive Session on any of the above posted agenda for which state law authorizes Executive Session to be held, including but not limited to Sections 55 1.071 [litigation and certain Consultation with attorney]. 551.072 [acquisition of interest in real property], 55 1.073 [prospective gift to city], 55 1.074 [certain personnel deliberations], 551.076 [deployment/implementation of security personnel or devices], or 551.087 [Deliberations regarding Economic Development Negotiations]. The City of Leander is committed to compliance with the American with Disabilities Act. Reasonable modifications and equal access to communications will be provided upon request. Please call the City Secretary at (512) 528-2743 for information. Hearing impaired or speech disabled persons equipped with telecommunication devices for the deaf may call (512) 528-2800. I certify that the above agenda for this meeting of the City Council of the City of Leander, Texas, was posted on the bulletin board at City Hall in Leander, Texas, on the 13 day of January 2023 by 5:00 p.m. pursuant to Chapter 551 of the Texas Government Code.

Dara Crabtree

Dara Crabtree, City Secretary, TRMC

AGENDA ITEM # 10

EXECUTIVE SUMMARY
01/19/2023

AGENDA SUBJECT:

Approval of the minutes for meeting held on January 5, 2023.

BACKGROUND:

Attached are minutes for meetings held on January 5, 2023.

PRESENTER:

Dara Crabtree, City Secretary

Attachments

1. Draft Minutes

MINUTES
CITY COUNCIL MEETING
CITY OF LEANDER, TEXAS

Pat Bryson Municipal Hall
201 North Brushy Street - Leander, Texas
Thursday - January 5, 2023

Mayor – Christine DeLisle	**Place 4 – Na'Cole Thompson, *Mayor Pro Tem***
Place 1 – Kathryn Pantalion-Parker	**Place 5 – Chris Czernek**
Place 2 – Esme Mattke Longoria	**Place 6 – Becki Ross**
Place 3 – David McDonald	**City Manager – Rick Beverlin**

The meeting will also be live-streamed at the following link: https://www.leandertx.gov/video.

BRIEFING WORKSHOP - CONVENE AT 6:00 PM

1. Opened meeting at 6:00 p.m.

2. Roll Call reflected all present.

3. Convened into Executive Session at 6:01 p.m. pursuant to Section 551.074, Texas Government Code, to discuss or deliberate the appointment, employment, evaluation, reassignment, duties, discipline, or dismissal of a public officer or employee: city manager.

   Reconvened into open session at 6:55 p.m. to take action as deemed appropriate in the City Council's discretion regarding city manager. The executive session is recessed until the end of the regular meeting.

   The briefing workshop is adjourned at 6:56 p.m.

REGULAR MEETING – CONVENE AT 7:00 PM

4. Opened meeting at 7:00 p.m., Invocation was provided by Pastor McDonald of DeMarcus Road Ministries and Mayor Christine led the Pledges of Allegiance.

5. Roll Call reflected all present.

6. Public comments on items not listed in the agenda.

   Public comments on items listed in the agenda will be heard at the time each item is discussed by Council.

   [All comments are limited to no more than 3 minutes (6 minutes if translation is needed) per individual.]

Keisha Bradford - commented on Martin Luther King March and Celebration being held on Monday, January 16 in Old Town Park.

Keith Marsh - commented on changing zoning ordinance to allow carports on side of property; purchased carport but denied permit; and consider different regulations for older neighborhoods.

Chad Merrigan, Riva Ridge - commented on regarding road damage and construction access to a private road (Riva Ridge Drive) in Leander.

William Schwartz, - commented on gas issue in Travisso; and Travisso HOA ban of artificial turf grass.

7. Staff Update
   - Recent weather event included: duration of freezing event started late on December 22 through mid-day December 25; temperatures as low as 8 degrees; emergency management center readiness; preventative measures; pipe bursts, Atmos gas outages; BCRUA equipment failures; staff was not notified of BCRUA issue until January 4; Atmos has been invited to attend a future Council meeting; and BCRUA to provide post-incident and related status report; monitor Governor Abbott's request for investigation; and update Council on EOC operations, status of damaged city facilities and plans for weatherization improvement.

CONSENT AGENDA: ACTION

Mayor Christine announced Item 16 was pulled from the consent agenda and would be considered separately.

Motion by Mayor Pro Tem Na'Cole Thompson, Seconded by Councilmember Esme Mattke Longoria to approve consent agenda items 8 through 15.

Vote: 7 - 0

8. Approval of the minutes for the meeting held on December 15, 2022.

9. Acceptance of public infrastructure improvements for Hero Way - Medical Office Park.

10. Award of construction contract to Austin Engineering Company, Inc. for wastewater collection system lift station improvements: Phase 1 – Forcemain (CIP Project WW.44) in the amount of $439,383.00; and authorize the City Manager to execute any and all necessary documents.

11. Approval of purchase of one (1) vacuum system truck from Kinloch Equipment & Supply, Inc. in the amount of $341,377.00 utilizing The Interlocal Purchasing System (TIPS) cooperative purchasing program; and authorize the City Manager to execute any and all necessary documents.

12. Approval of overhead utility easement dedication with Pedernales Electric Cooperative, Inc. (PEC) for the proposed dual feed power connection to City of Leander’s wastewater treatment plant located at Ranch Road 2243; and authorize the City Manager to execute any and all necessary documents.

13. Approval of a special event permit and street closures for the Martin Luther King Day March and Celebration being held on Monday, January 16, 2023, from 11:00 a.m. to 2:00 p.m. in Old Town Park.

14. Approval of an Ordinance adopting the official zoning map of the City of Leander, Williamson and Travis Counties, Texas attached as Exhibit "A", City of Leander, Texas Zoning Map, hereto and incorporated herein; providing for the maintenance and recorded into record as the official zoning map; and providing an effective date.

15. Approval of an Ordinance adopting an official map of the City of Leander, Williamson and Travis Counties, Texas attached as Exhibit "A", Leander City Map, hereto and incorporated herein; providing for the maintenance and filing of the official map; declaring as the official City Limits and Extraterritorial Jurisdiction (ETJ); and providing an effective date.

16. Approval of a Second Reading of an Ordinance regarding Zoning Case Z-22-0025 to amend the current zoning of Interim SFR-1-B (Single-Family Rural) to SFS-2-B (Single-Family Suburban) on one (1) parcel of land approximately 21.599 acres ± in size, more particularly described by Williamson Central Appraisal District parcel R031560; and more commonly known as 800 CR 177, Leander, Williamson County, Texas.

Motion by Councilmember Kathryn Pantalion-Parker, Seconded by Councilmember Becki Ross ti approve the Second Reading of an Ordinance regarding Zoning Case Z-22-0025 to amend the current zoning of Interim SFR-1-B (Single-Family Rural) to SFS-2-B (Single-Family Suburban) on one (1) parcel of land approximately 21.599 acres ± in size, more particularly described by Williamson Central Appraisal District parcel R031560; and more commonly known as 800 CR 177, Leander, Williamson County, Texas, following a discussion.

Vote: 6 - 1

NAY: Councilmember David McDonald

PUBLIC HEARING: ACTION

17. Conduct a Public Hearing and consider action regarding Zoning Case Z-22-0021 to amend the current zoning of Interim SFR-1-B (Single-Family Rural) to adopt the Bar W Ranch East Commercial PUD (Planned Unit Development) with the base zoning districts of SFT-2-A (Single-Family Townhouse) and GC-2-A (General Commercial) on one (1) parcel of land approximately 51.426 acres ± in size, more particularly described by Williamson Central Appraisal District Parcel R021711; and generally located to the southeast of the intersection of Kauffman Loop and Ronald W. Reagan Boulevard., Leander, Williamson County, Texas.***[Postponed due to notification error]***

18. Mayor Christine opened a Public Hearing at 7:37 p.m. regarding Subdivision Case CP-22-0007 to adopt the Beasley Subdivision Concept Plan and Subdivision Case PP-22-0010 to adopt the Beasley Subdivision Preliminary Plat on one parcel of land approximately 13.437 acres ± in size, more particularly described by Williamson Central Appraisal District Parcel R620136; generally located southwest of RM 2243 and Ronald W. Reagan Boulevard., Leander, Williamson County, Texas. No one spoke in favor or opposition of the request. The Public Hearing closed at 7:37 p.m.

- Discuss and consider action regarding Subdivision Case CP-22-0007 and PP-22-0010 as described above.

Motion by Councilmember Chris Czernek, Seconded by Councilmember Kathryn Pantalion-Parker to approve Subdivision Case CP-22-0007 to adopt the Beasley Subdivision Concept Plan and Subdivision Case PP-22-0010 to adopt the Beasley Subdivision Preliminary Plat on one parcel of land approximately 13.437 acres ± in size, more particularly described by Williamson Central Appraisal District Parcel R620136; generally located southwest of RM 2243 and Ronald W. Reagan Boulevard., Leander, Williamson County, Texas.

Vote: 7 - 0

19. Mayor Christine opened a Public Hearing at 7:38 p.m. regarding the B Twisted Annexation Case 22-A-005 regarding the voluntary annexation of 12.40 acres ± in size, more particularly described by Williamson Central Appraisal District Parcel R605507; and generally located approximately 3,000 feet to the west of intersection of Bagdad Road and CR 281 on the south side of CR 281, Leander, Williamson County, Texas. No one spoke in favor or opposition of the request. The Public Hearing closed at 7:38 p.m.

- Discuss and consider action regarding B Twisted Annexation Case 22-A-005 as described above.

Motion by Councilmember Kathryn Pantalion-Parker, Seconded by Councilmember Chris Czernek to approve the B Twisted Annexation Case 22-A-005 regarding the voluntary annexation of 12.40 acres ± in size, more particularly described by Williamson Central Appraisal District Parcel R605507; and generally located approximately 3,000 feet to the west of intersection of Bagdad Road and CR 281 on the south side of CR 281, Leander, Williamson County, Texas, comment followed.

Vote: 7 - 0

20. Mayor Christine opened a Public Hearing at 7:40 p.m. regarding the Bar W Ranch East Annexation Case A-22-0006 regarding the voluntary annexation of 51.426 acres ± in size, more particularly described by Williamson Central Appraisal District Parcel R021711; and generally located to the southeast of the intersection of Kauffman Loop and Ronald W Reagan Boulevard, Leander, Williamson County, Texas. No one spoke in favor or opposition of the request. The Public Hearing closed at 7:40 p.m.

- Discuss and consider action regarding Bar W Ranch East Annexation Case A-22-0006 as described above.

Motion by Councilmember Chris Czernek, Seconded by Councilmember Kathryn Pantalion-Parker to approve the Bar W Ranch East Annexation Case A-22-0006 regarding the voluntary annexation of 51.426 acres ± in size, more particularly described by Williamson Central Appraisal District Parcel R021711; and generally located to the southeast of the intersection of Kauffman Loop and Ronald W Reagan Boulevard, Leander, Williamson County, Texas.

Vote: 7 - 0

REGULAR AGENDA

21. Discuss and consider action on an Ordinance amending Article 9.05, Code of Ethics, Section 9.05.009 Financial Disclosure (a)(1) Existing city officials, to reflect employee titles as they appear in the City of Leander Organizational Chart for Executive Director of Development Services, Executive Director of Finance; the addition of Chief of Staff and Executive Director of Infrastructure to the existing staff required to submit the financial disclosure; and related matters.

Motion by Councilmember Esme Mattke Longoria, Seconded by Councilmember Kathryn Pantalion-Parker to approve an Ordinance amending Article 9.05, Code of Ethics, Section 9.05.009 Financial Disclosure (a)(1) Existing city officials, to reflect employee titles as they appear in the City of Leander Organizational Chart for Executive Director of Development Services, Executive Director of Finance; the addition of Chief of Staff and Executive Director of Infrastructure to the existing staff required to submit the financial disclosure; and related matters.

Vote: 7 - 0

22. Discuss and consider action on an Ordinance amending Article 1.14, Division 2, Public Art Commission, providing for the name to change to Public Art and Culture Commission; expanding the powers and duties to include cultural and diverse events; providing for a definition of culture; and related matters.

Motion by Mayor Christine DeLisle, Seconded by Mayor Pro Tem Na'Cole Thompson to approve an Ordinance amending Article 1.14, Division 2, Public Art Commission, providing for the name to change to Public Arts and Culture Commission; expanding the powers and duties to include cultural and diverse events; providing for a definition of culture; and related matters, following a discussion section b(3) the last sentence being with thereafter should remain in the ordinance.

Vote: 7 - 0

23. Council Member Future Agenda Items *[Any deliberation of or decision about the subject of the inquiry shall be limited to a proposal to place the subject on the agenda for a subsequent meeting.]*

- *San Gabriel Parkway traffic signal at intersection of Palmera Ridge*
- *Carport ordinance amendment*

24. Council Member Closing Statements.

Esme Mattke Longoria - commented on Martin Luther King March and Celebration, essay contest through Leander Independent School District, and two days remaining for Christmas tree recycling.

Chris Czernek - commented on hope and hope will get us through this year.

Na'Cole Thompson - stated looking forward to seeing everyone at the Martin Luther King March and Celebration.

Christine DeLisle - thanked the City Manager and Staff for all their hard work getting us through the recent freeze; commented dinner was provided by Popeyes tonight; upcoming Martin Luther King March and Celebration; Dairy Queen now open; reminded everyone to shop locally; thanked Mayor Pro Tem's father for providing the blessing tonight; and excited about the traffic signals going in at Sonny Drive and Bagdad Road and Hero Way and Ronald Reagan Boulevard.

25. Convened back into Executive Session at 7:56 p.m., if necessary, pursuant to Section 551.074, Texas Government Code, to discuss or deliberate the appointment, employment, evaluation, reassignment, duties, discipline, or dismissal of a public officer or employee: city manager, if needed.

Reconvened into open session at 9:26 p.m. to take action as deemed appropriate in the City Council's discretion regarding city manager.

Motion by Councilmember Chris Czernek, Seconded by Mayor Christine DeLisle to authorize a one-time 4% of the base salary to be paid in a lump sum to the city manager.

Vote: 7 - 0

26. Adjourned at 9:26 p.m.

APPROVED:

_____
MAYOR

ATTEST:

_____
CITY SECRETARY

AGENDA ITEM # 11

EXECUTIVE SUMMARY
01/19/2023

AGENDA SUBJECT:

Approval of renewal of an Interlocal Agreement between Willliamson County EMS and Leander Fire Department to meet the Department of State Health Services rule 157.14 regarding both the First Responder Organization and Medical Director agreements; and authorize the City Manager to execute any and all necessary documents.

BACKGROUND:

Leander Fire Department is a registered First Responder Organization (FRO) with the Texas Department of State Health Services, to provide emergency medical first responder services with patient transport being provided by Williamson County EMS. To comply with Texas Administrative Code 157.14, requirements for a First Responder Organization License, 157.14(c)(1)(E) requires a written affiliation agreement with the primary license EMS provider in the service area, that must be approved by the medical director of the EMS provider. The medical director has changed, triggering the need to update both the First Responder Organization agreement as the Medical Director agreement, prior to the renewal period of our FRO license that expires January 31, 2024.

RECOMMENDATION:

Staff recommends approval.

PRESENTER:

Billy Wusterhausen, Fire Chief

Attachments

1. LFD FRO Agreement
2. Leander Medical Director Agreement

WILLIAMSON COUNTY EMERGENCY MEDICAL FIRST RESPONDER ORGANIZATION AGREEMENT

Williamson County EMS shall be an EMS provider currently licensed by the Department of State Health Services (DSHS). **Leander Fire Department** shall be a first responder organization (FRO) currently registered by the Department of State Health Services rule 157.14. FRO is an individual(s) or an organization which:

- Routinely responds to medical emergency situations
- Utilizes emergency medical service (EMS) personnel certified by Texas DSHS
- Provide on-scene patient care; and
- Do not transport patients

Williamson County EMS ambulances will, when resources are available, transport patients from within the Williamson County geographical area, and agreed upon existing locations, served by the **Leander Fire Department.** Patient treatment and/or patient refusal of treatment will be done according to the standards defined in the Williamson County EMS Scope of Care and approved by the Williamson County EMS Medical Director.

Ambulance Cancellation

Williamson County EMS ambulances may be cancelled if:

1. There is no patient on-scene
2. There is no person on-scene who may be defined as a patient
3. The patient is obviously deceased as a result of a condition incompatible with life.

For any reason or operational preference, First Responder Organizations may choose NOT to cancel **Williamson County EMS** ambulances at any time.

A **Williamson County EMS** ambulance may be cancelled by **Leander Fire Department** WITH a patient on-scene which necessitates a written refusal of medical care to be documented by **Leander Fire Department**. The document (form or format) used for this purpose must be approved by the EMS Medical Director and Deputy Director. Once a **Williamson County EMS** paramedic unit arrives or medical care has been initiated, patient transport and/or patient refusal of transport documentation will be done by **Williamson County EMS** paramedic personnel only.

Transport Decisions

Transport and destination of transport decisions will be determined by **Williamson County EMS**. Air medical transport resources may be requested and cancelled as deemed appropriate by the responding FRO or EMS unit.

Chain of Command

On-scene chain of command, within the **Leander Fire Department** response area, will follow the national incident management system (NIMS) with **Leander Fire Department** providing the Incident Commander and Williamson County EMS providing the Medical Branch of the Operations Section as needed, or **Williamson County EMS and Leander Fire Department** participating in a unified command structure. EMS personnel shall be in charge of patient treatment & transport once on-scene. Law Enforcement personnel may assume the Incident Commander role in the case of a crime scene, and/or be a part of the unified command system.

First responder personnel generally will not accompany the patient to the transport destination unless requested by EMS paramedic personnel or as needed for continuing education purposes. EMS paramedic personnel shall be in charge of patient treatment during transport. **Williamson County EMS** will make every attempt to return **Leander Fire Department** personnel. System response needs may result in significant delays in the return of **Leander Fire Department** personnel.

WILLIAMSON COUNTY EMERGENCY MEDICAL FIRST RESPONDER ORGANIZATION AGREEMENT

Patient Confidentiality

The **Leander Fire Department** will develop and comply with a patient confidentiality policy designed to secure all patient records and information at all times. The First Responder Organization will also ensure the Organization and its members comply with the requirements of the Health Insurance Portability and Accountability Act (HIPAA) and provide requisite proof of initial or ongoing training. The Organization's patient confidentiality policy must also address a patient record release procedure approved by the Williamson County EMS Custodian of Records.

Quality Improvement

The **Leander Fire Department** system-**credentialed** responders must be authorized by the department to fully participate in the Quality Improvement process as required by the Medical Director. This process includes participation in in-person call reviews, documentation reviews and continuing education as outlined in the **Williamson County EMS** System First Responder Organization SOG's. Responders must fully participate to retain system credentialing.

Responder Identification

Based on Texas Department of State Health Services Rule 157.14(e)(4) the **Leander Fire Department** and **Williamson County EMS** shall agree on the following:

- Response availability days of the week & times of the day
- First responder identification tag that conspicuously shows the responder's name, agency's name, responder's state certification level and responder's system credentialing level. (The agency name and responder's state certification level may be designated by the responder's uniform. This identification is not necessary for situations where the responder must wear emergency firefighting protective gear to protect the responder). The ID tag must meet the following requirements:
    - Must have responder's photo
    - Indicates the responder's name, agency and state certification level
    - Indicates the responder's system credentialing level using the following color code. The color code is prominently placed on the ID tag as a border or background.
        - Maroon Border – responder credentialing at Paramedic level
        - Gold Border –responders credentialing at the FRP level
        - Green Border –responder credentialing at the AEMT level
        - Blue Border –responder credentialing at EMT level
        - Orange Border – responder credentialing at CFR level
        - No color Border – trained or untrained personnel who are not credentialed to provide any patient care
- First responder identification tag must be prominently displayed when interacting with the patient and when patient care is being rendered
- An alternative identification system may be utilized in incidents where there is potential danger to a responder if identified by name.

Other Requirements

In addition to the above, the **Leander Fire Department** will also:

- Provide a copy of the organization's response policy addressing code of responses
- Ensure a copy of the current Williamson County EMS Scope of Care, approved Medical Equipment list, and First Responder organization certification is provided on all apparatus/vehicles responding to medical incidents
- Ensure all system credentialed responders maintain current Texas Department of State Health Services certification or licensure at or above the system credentialing level
- Report to the Medical Director any disciplinary actions imposed on an employee or volunteer as it relates to being a credentialed responder
- **Leander Fire Department** agrees to provide care at the minimum of CFR credential level as defined

WILLIAMSON COUNTY EMERGENCY MEDICAL FIRST RESPONDER ORGANIZATION AGREEMENT

in the WCEMS System SOC's.

Williamson County EMS will not be responsible for supplying, maintaining, or retrieving the **Leander Fire Department** equipment or supplies outside of incidents of negligence or willful misconduct. **Williamson County EMS** will replace supplies used by the **Leander Fire Department** while on the scene, on a one for one basis provided the **Leander Fire Department** does not bill the patient for these same items. **Leander Fire Department** assumes any and all associated liability related to patient care rendered by **Leander Fire Department** personnel. **Williamson County EMS** shall not be responsible for care rendered, accidents, injuries, exposures or any liability involving **Leander Fire Department, Leander Fire Department** personnel, equipment, supplies or vehicles unless resulting from negligence or willful misconduct.

In the event any discrepancies arise between **Williamson County EMS** and **Leander Fire Department** personnel relating to patient care or transport, the respective Department Chiefs/Directors shall be advised. A meeting will be arranged within a reasonable time from the incident for all personnel involved with the Williamson County Medical Director (clinical issues) and/or the Williamson County EMS Deputy Director (operational issues). This will be done to prevent any problems from creating animosity between departments, thus adversely affecting patient care.

The **Leander Fire Department** will function under the most current Williamson County EMS System Scope of Care.

Further definition of elements herein can be viewed in the **Williamson County EMS** Scope of Care.

Either party may cancel this agreement with a 60-day advance written notice.

This document supersedes previous agreements.

Leander Fire Department:

Richard B. Beverlin, III		City Manager	
(print name)	(signature)	(title)	(date)

Williamson County EMS:

Mike Knipstein		Director	1/13/23
(print name)	(signature)	(title)	(date)

Williamson County EMS:

Taylor K. Ratcliff, MD		Medical Director	1/12/23
(print name)	(signature)	(title)	(date)

Williamson County Emergency Medical Services
Medical Director – FRO Agreement

Statement of Medical Direction/Supervision of Pre-Hospital Care

The purpose of this document is to provide verification of medical direction and supervision of Pre-hospital care delivered by Williamson County First Responder Organizations.

I affirm that I am:

1. A physician licensed to practice medicine in the State of Texas;
2. Familiar with the operation of EMS systems;
3. Experienced in pre-hospital emergency care of acutely ill or injured patients.
4. Actively involved in:
    - the emergency management of acutely ill and/or injured patients,
    - in the medical continuing education of the EMS personnel under my supervision at their respective level of certification,
    - in the medical audit, review, and critique of the EMS personnel performance; and,
    - in the administrative processes affecting the delivery of emergency pre-hospital care;
5. Knowledgeable about local multi-casualty plans;
6. Familiar with dispatch and communications operations of pre-hospital emergency units; and,
7. Knowledgeable about laws and regulations affecting local regional, and state EMS operations.

I understand that as medical director, I will:

1. Approve the level of pre-hospital care which may be rendered locally by each of the EMS personnel under my supervision;
2. Establish and monitor compliance with field performance guidelines for EMS personnel;
3. Establish and monitor compliance with training guidelines which meet or exceed Texas Department of State Health Services' EMS certification regulations;
4. Oversee the development, implementation, and revision of protocols and/or standing orders;
5. Direct and effect system audit and quality assurance program;
6. Make formal recommendations on medically related aspects of EMS operations;
7. Function as the primary liaison between EMS administration and the local medical community;
8. Take or recommend appropriate remedial or corrective measures for EMS personnel;
9. Based on due cause, de-credential a system qualified provider barring them from the provision of medical care
10. Develop and implement a comprehensive mechanism for management of patient care incidents,
11. Ensure that each department under my license adheres to the First Responder Agreement between Williamson County EMS and each respective First Responder Organization.

Williamson County Emergency Medical Services
Medical Director – FRO Agreement

I agree to assume the authority and the responsibility of Medical Director for the **Leander Fire Department** from this date forward. Cancellation of this agreement requires a minimum of a sixty-day written notice of termination by either party. This agreement supersedes any previous agreement.

_____ Date: 1/12/23

Taylor K. Ratcliff, MD
3189 SE Inner Loop
Georgetown, TX 78626
(512) 943-1264

On behalf of the **Leander Fire Department**, I accept the authority and the responsibility of the Medical Director.

_____ Date: _____

Richard B. Beverlin III
City Manager

AGENDA ITEM # 12

EXECUTIVE SUMMARY
01/19/2023

AGENDA SUBJECT:

Approval of an Interlocal Agreement between the City of Leander and Williamson County regarding the design and construction of N. Bagdad Road (CR 279), from the city limits of Liberty Hill to just south of CR 281 within the city limits of Leander, for the purpose of providing formal coordination and consent for the County's design and construction of the project within the city limits and requiring the City to maintain identified water quality features.

BACKGROUND:

The CR 279/Bagdad Road project is being designed and constructed by Williamson County to provide safety and mobility improvements to the existing corridor between Liberty Hill city limits and Leander city limits.

The project includes the reconstruction and realignment of the existing two (2)- lane road with the addition of a center turn lane and shoulders. Once the need arises and funding is secured, the road would include an additional lane in each direction, widening the road from three (3) lanes to five (5) lanes.

Plans, specifications, and estimates (PS&E) design is underway by Williamson County's Engineer Binkley and Barfield, Inc., and is expected to be finalized by summer 2023. Construction is anticipated to begin in the fall of 2023 with a duration of approximately two (2) years.

Within the ILA, the City agrees to own, operate, and maintain the water quality features portion of the County project as shown in Exhibit "C".

RECOMMENDATION:

Staff recommends approval of the Interlocal Agreement between the City of Leander and Williamson County regarding the design and construction of Bagdad Road from the city limits of Liberty Hill to just south of CR 281 within the city limits of Leander.

PRESENTER:

Daniel Grimsbo, Executive Director of Infrastructure

Attachments

1. Leander Wilco ILA - Clean
2. Leander Wilco ILA - Redline

INTERLOCAL AGREEMENT BETWEEN THE CITY OF LEANDER AND WILLIAMSON COUNTY REGARDING THE DESIGN AND CONSTRUCTION OF BAGDAD ROAD FROM THE CITY LIMITS OF LIBERTY HILL, TEXAS TO SOUTH OF CR 281 LYING WITHIN THE LEANDER CITY LIMITS

THE STATE OF TEXAS	§	
	§	KNOW ALL BY THESE PRESENTS:
COUNTY OF WILLIAMSON	§	

THIS INTERLOCAL AGREEMENT ("**Agreement"**) is entered into between the City of Leander, Texas, a Texas municipal corporation (the "**City**") and Williamson County, a political subdivision of the State of Texas (the "**County**"). In this Agreement, the City and the County are sometimes individually referred to as "**a Party**" and collectively referred to as "**the Parties**".

WHEREAS, V.T.C.A., Government Code, Chapter 791, the Texas Interlocal Cooperation Act, provides that any one or more public agencies may contract with each other for the performance of governmental functions or services for the promotion and protection of the health and welfare of the inhabitants of this State and the mutual benefit of the parties;

WHEREAS, the County is and has been in the process of designing Bagdad Road from the city limits of Leander, Texas to south of CR 281 the approximate location being shown on Exhibit "A", attached hereto, (the "County Project"); and

WHEREAS, the City desires to cooperate with the County to facilitate the construction of the County Project; and

NOW, THEREFORE, in consideration of the foregoing premises and the mutual promises and agreements of the Parties contained in this Agreement, the Parties agree as follows:

I.
PURPOSE

1.01 General. The purpose of this Agreement is to provide formal coordination and consent for the County's design and construction of the County Project within the city limits and requiring the City to maintain certain water quality features as further described herein.

II.
DESIGN OF COUNTY PROJECT

2.01 County Obligations. The County shall be responsible for all costs associated with the construction bidding and management, right-of-way acquisitions, utility relocations and all other costs related to the design and construction of the County Project.

2.02. Maintenance. The County agrees to operate and maintain the County Project until the City annexes any property abutting a portion or portions of Bagdad Road, except for the water quality features as described in Section 3.02, below.

2.02. Insurance, Bonds and Warranties. The County shall require the County Project Contractor to name the City as an additional insured on any policies related to the County Project. The County shall require the contractor to provide performance bonds and maintenance bonds in favor of the City for the portions of the County Project operated and maintained by the County in minimum amounts required under Williamson County bond program construction contracts, and generally in the form as set out in Exhibit "B" attached hereto. The County shall transfer all warranties for the County Project to the City upon final completion and acceptance of the Project, or City annexation of any property abutting portions of Bagdad Road.

The County shall require the County Project contractor to issue a minimum construction warranty period of two (2) years from the formal acceptance of entire project completion.

III.

CITY OBLIGATIONS

3.01 Right-of-way. The City agrees that the County shall be permitted to exercise its power of eminent domain within the city limits if necessary to acquire property rights for the County Project.

3.02. Water Quality Features. The City agrees to own, operate and maintain the water quality features portion of the County Project as shown in Exhibit "C", attached hereto (the "Water Quality Features"). Prior to acceptance of ownership by City, the City and County shall designate representatives to conduct a final walk-through inspection of the Water Quality Features to identify and remedy any construction defects, or to otherwise confirm acceptance of the construction.

IV.
GENERAL PROVISIONS

4.01 Authority. This Agreement is made in part under the authority conferred in Chapter 791, *Texas Government Code*

4.02 Term. This Agreement shall commence upon execution of this Agreement and shall end upon the completion of the County Project.

4.03 Severability. The provisions of this Agreement are severable and, if any provision of this Agreement is held to be invalid for any reason by a court or agency of competent jurisdiction, the remainder of this Agreement will not be effected and this Agreement will be construed as if the invalid portion had never been contained herein.

4.04 Default and Remedies. In the event that the City defaults under this Agreement, and such default is not cured within thirty (30) days after the County provides written notice to cure, County may, in addition to any other remedy at law or in equity, immediately terminate this Agreement or seek specific performance of this Agreement. In the event that the County defaults under this Agreement, and such default is not cured, City may, in addition to any other remedy at law or in equity, immediately terminate this Agreement or seek specific performance of this Agreement. Breach, and related specific performance, of the City's obligations is limited to circumstances where the City has not made any effort to obtain a right-of-way dedication.

4.05 Cooperation. The Parties agree to cooperate at all times in good faith to effectuate the purposes and intent of this Agreement.

4.06 Entire Agreement. This Agreement contains the entire agreement of the Parties regarding the subject matter hereof and supersedes all prior or contemporaneous understandings or representations, whether oral or written, regarding the subject matter and only relates to the County Project shown on Exhibit "A."

4.07 Amendments. Any amendment of this Agreement must be in writing and will be effective if signed by the authorized representatives of the Parties.

4.08 Applicable Law; Venue. This Agreement will be construed in accordance with Texas law. Venue for any action arising hereunder will be in Williamson County, Texas.

4.09 Notices. Any notices given under this Agreement will be effective if (i) forwarded to a Party by hand-delivery; (ii) transmitted to a Party by confirmed telecopy; or (iii) deposited with the U.S. Postal Service, postage prepaid, certified, to the address of the Party indicated below:

CITY:	City of Leander 105 North Brushy Street Leander, Texas 78641 Attn: City Manager
COUNTY:	710 S. Main Street, Georgetown, Texas 78626 Attn: Bill Gravell, Jr. Telephone: (512) 943-1550 Facsimile: (512) 943-1662

4.10 Counterparts; Effect of Partial Execution. This Agreement may be executed simultaneously in multiple counterparts, each of which will be deemed an original, but all of which will constitute the same instrument.

4.11 Authority. Each Party represents and warrants that it has the full right, power and authority to execute this Agreement.

4.12 Effective Date. This Agreement is executed to be effective on the date the last Party signs this Agreement.

4.13 No Joint Venture. The County Project is a sole project of the County and is not a joint venture or other partnership with the City.

[signature pages follow]

CITY OF LEANDER, TEXAS

By:_____

Name:Christine DeLisle

Its:Mayor

ATTEST:

By: _____

Dara Crabtree, City Secretary

THE STATE OF TEXAS §
§
COUNTY OF WILLIAMSON §

THIS INSTRUMENT was acknowledged before me on this 19 day of January, 2023, by Christine DeLisle as Mayor of the City of Leander, a Texas home-rule city, on behalf of said city.

_____
Notary Public, State of Texas

WILLIAMSON COUNTY, TEXAS

By:_____
Bill Gravell, Jr., County Judge

ATTEST:

By: _____
Nancy Rister, County Clerk

THE STATE OF TEXAS §
§
COUNTY OF WILLIAMSON §

THIS INSTRUMENT was acknowledged before me on this ____ day of _____, 2023, by Bill Gravell, Jr., County Judge of Williamson County, Texas, on behalf of said County.

_____
Notary Public, State of Texas

WILLIAMSON COUNTY

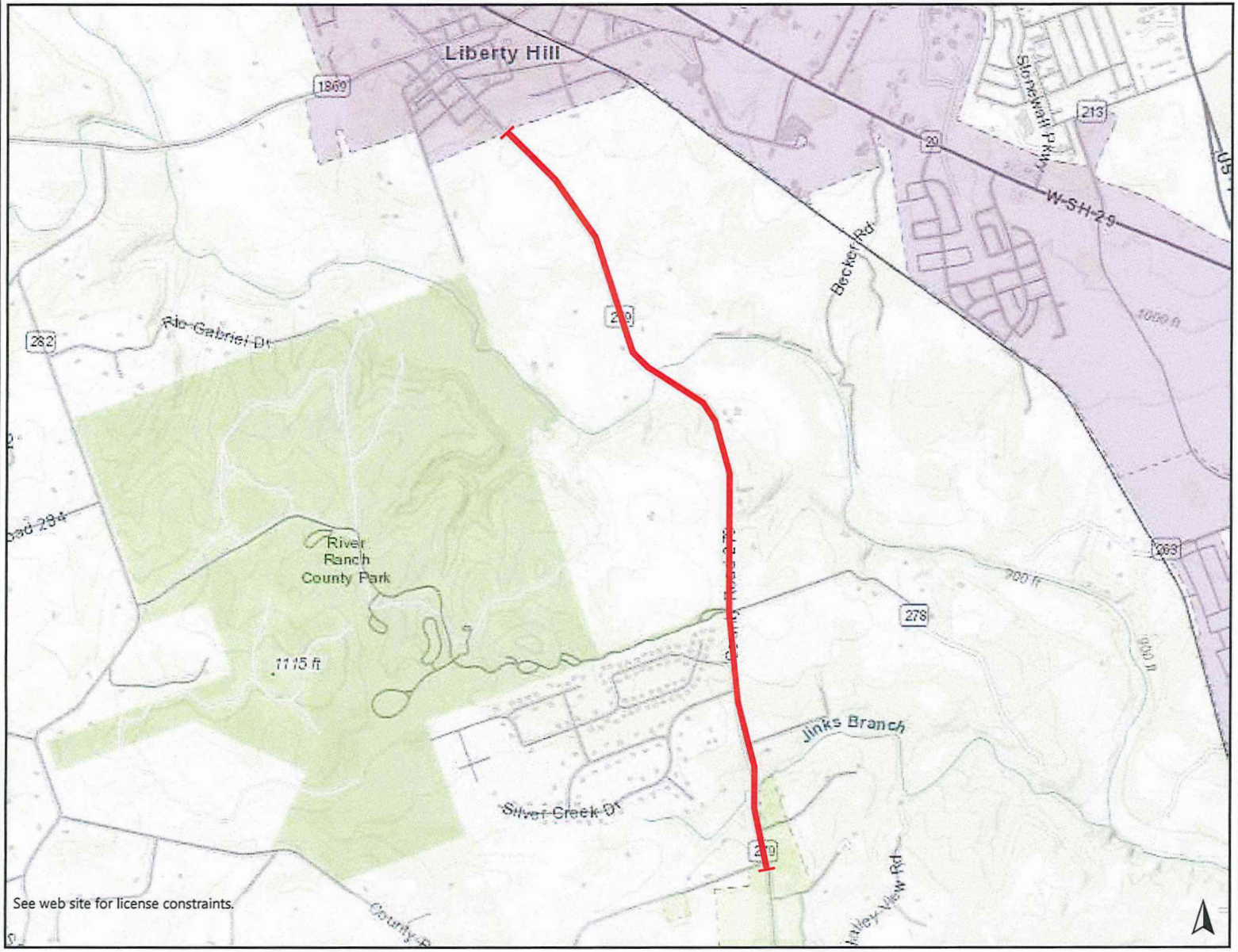

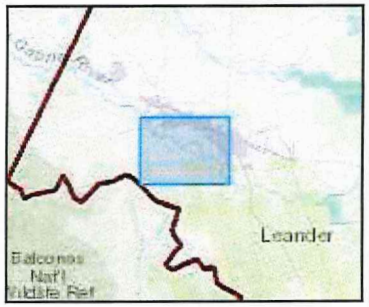

Legend

Streets
- Streets

Railroads
- Railroads

Municipalities
- Incorporated Cities
  - LEANDER
  - LIBERTY HILL
  - PROJECT LIMTS

0 1 2 mi

1:36112

This map and data are for general planning purposes only. The base map conforms to National Map Accuracy Standards in unobstructed areas. Williamson County makes no warranty, representation or guarantee as to the content, sequence, accuracy, timeliness or completeness of any of the database information or spatial locations depicted. Furthermore, all warranties on merchantability and fitness for a particular purpose are hereby disclaimed. In no event shall Williamson County be liable to the recipient or any other party for damages of any type, including but not limited to incidental, consequential or exemplary damages arising out of the use or inability to use these materials.

8/23/2022 11:59:09 AM

THIS MAP IS NOT TO BE USED FOR NAVIGATION

Notes

EXHIBIT A

MAINTENANCE BOND

KNOW ALL MEN BY THESE PRESENTS: That _____
(NAME OF CONTRACTOR)

_____

as principal, hereinafter called "CONTRACTOR" and _____
_____
(NAME OF SURETY)

a corporation organized under the laws of _____
as Surety, hereinafter called "SURETY", do hereby expressly acknowledge themselves to be held and bound to pay unto WILLIAMSON COUNTY as Obligee, a political subdivision of the State of Texas, hereinafter called "COUNTY", the sum of (20% of total construction contract amount)

_____
(INSERT WORDS)
_____ Dollars ($_____) for the payment of which sum well and truly to be made unto said COUNTY and its successors, said principal and sureties do hereby bind themselves, their assigns, and successors jointly and severally.

This obligation is conditioned, however, that whereas said CONTRACTOR has by written Agreement dated _____ , 20 _____ , entered into an agreement with said COUNTY to build and construct _____

_____
which said Agreement and the Contract Documents therein mentioned and adopted by the COUNTY are hereby expressly made a part thereof as though the same were written and embodied herein.

WHEREAS, under the terms and conditions of the Agreement, specifications and other Contract Documents, it is provided that the CONTRACTOR shall maintain and keep in good repair the Work constructed and/or equipment furnished by it as contemplated by the plan drawings, specifications, and other Contract Documents, and perform for a period of _2__ years from the date of acceptance as shown on the "Certificate of Completion" issued by the ENGINEER, or the date of Final Payment by the COUNTY if a separate Certificate of Completion is not issued, all necessary repairs, reconstruction and renewal of any part of said construction, and to furnish the labor and materials to make good and to repair any defective condition growing out of or on account of the breakage or failure of any substance or the improper function of any part of the construction work. The CONTRACTOR shall reimburse the COUNTY for the costs of all engineering and special services required to be furnished by the COUNTY which are directly attributable to the restoration of the constructed work. Said maintenance contemplates the complete restoration of the constructed work to a functional use during the said period as set forth above. It is the intended purpose of this section to require the correction of all defective conditions resulting from materials furnished or work and labor performed by the CONTRACTOR under the conditions prescribed by the Agreement, plans and specifications and other Contract Documents; and in case the CONTRACTOR shall fail or refuse to commence and actively pursue such corrections within ten (10) days after proper written notifications have been furnished to it by the COUNTY, it is agreed that the COUNTY may do said work and supply such materials and the said CONTRACTOR and SURETY herein shall be liable for the payment of all costs thereby incurred.

NOW THEREFORE, if the said CONTRACTOR shall keep and perform its said agreement to maintain said work and keep the same in good repair for the said maintenance period as provided above, then these presents shall be null and void and have no further effect, but if default shall be made by the

CONTRACTOR in the performance of its Agreement to maintain and repair said work, then these presents shall have full force and effect and the COUNTY shall have and recover from the said CONTRACTOR and its sureties damages in the premises, as provided, and it is further understood and agreed that this obligation shall be a continuing one against the principal and sureties hereon, and that successive recoveries may be had hereon for successive breaches until the full amount shall have been exhausted; and it is further understood that the obligation herein to maintain said work shall continue throughout said maintenance period, and the same shall not be changed, diminished, or in any manner affected from any cause during said time.

IN WITNESS WHEREOF, this instrument is executed this _____ day of _____, 20 ____

PRINCIPAL	PHONE NO.
SIGNATURE	(SEAL)
NAME & TITLE	WITNESS OR ATTEST TO SEAL
SURETY	PHONE NO.
SIGNATURE	(SEAL)
NAME & TITLE	WITNESS OR ATTEST TO SEAL

SIGNATURE OF LICENSED LOCAL RECORDING AGENT
appointed to countersign on behalf of Surety

EXHIBIT C

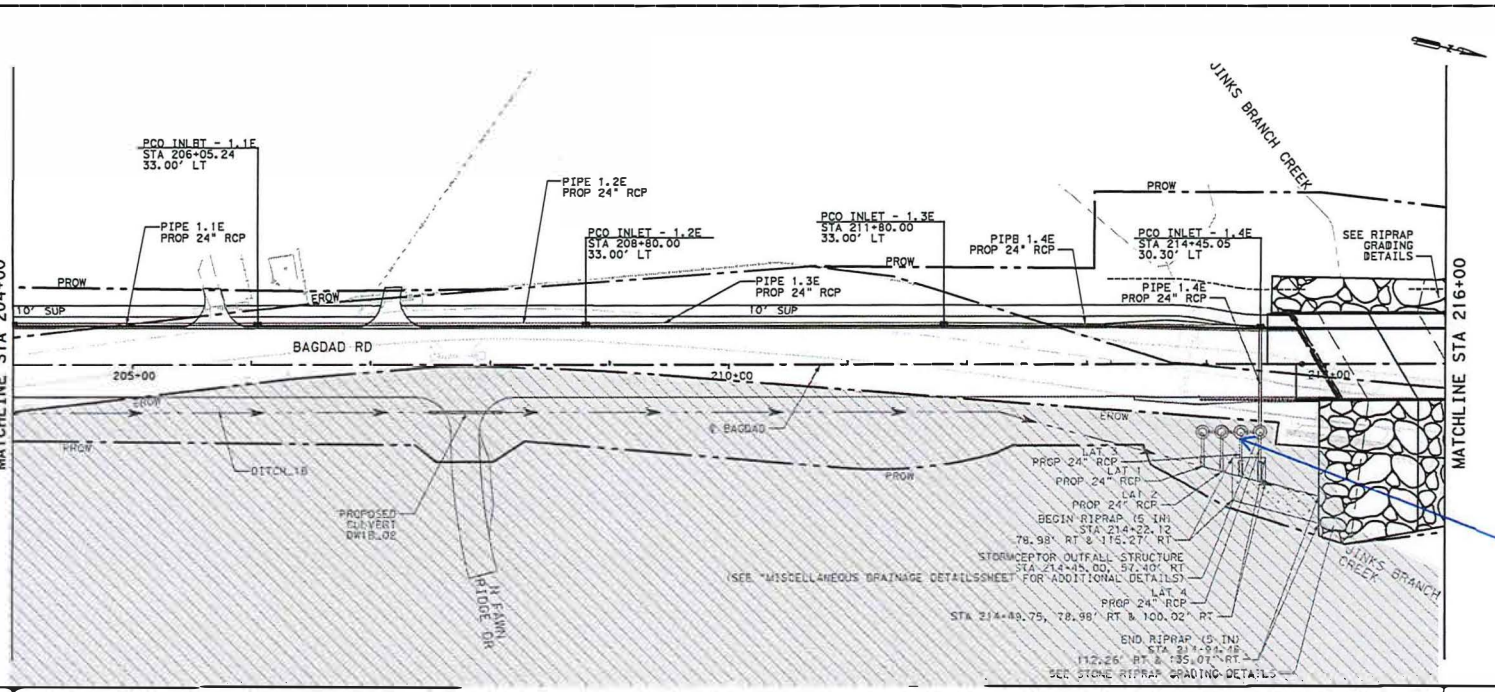

NO.	DATE	REVISION	APPROVED

HORZ 0' 25' 50' 100'
VERT 0' 5' 10'

LEGEND:

- EXIST ROW
- PROP ROW
- DITCH FLOW LINE

NOTES:

1. SEE "DITCH DRAINAGE CALCULATIONS" SHEET FOR PROPOSED DITCH GEOMETRY.
2. SEE "DRIVEWAY CULVERT SUMMARY" TABLE FOR DRIVEWAY CULVERT DETAILS.

EXHIBIT C

City Limits - City of Leander

SEE PROFILE NEXT SHEET

POINT	STA	OFFSET		ELEVATION	DESCRIPTION
1	214+54.76	74.90	LT	967.00	TOC
2	214+67.65	74.60	LT	965.00	BOC
3	215+82.62	71.96	LT	965.00	BOC
4	216+18.04	75.02	LT	967.00	TOC
5	214+54.04	43.50	LT	980.85	TOC
6	214+92.98	43.50	LT	964.00	BOC
7	215+76.79	43.50	LT	964.00	BOC
8	216+18.04	43.50	LT	980.53	TOC
9	214+94.45	30.50	RT	980.86	TOC
10	215+35.70	30.50	RT	963.00	BOC
11	216+19.52	30.50	RT	963.00	BOC
12	216+58.45	30.50	RT	980.14	TOC
13	214+94.45	145.73	RT	964.00	TOC
14	215+21.08	151.78	RT	962.00	BOC
15	216+38.77	130.68	RT	962.00	BOC
16	216+58.45	127.15	RT	964.00	TOC

TOC = TOP OF CHANNEL
BOC = BOTTOM OF CHANNEL

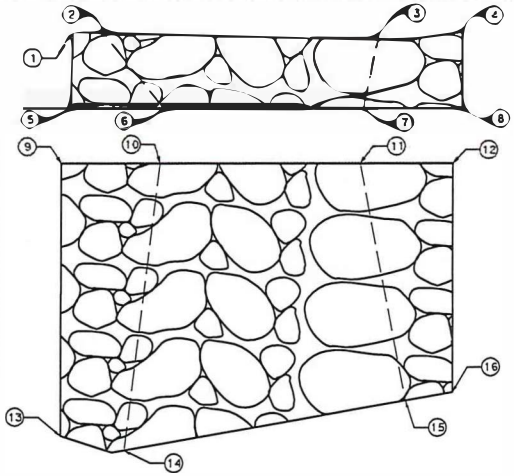

STONE RIPRAP GRADING DETAILS
NOT TO SCALE

THESE DOCUMENTS ARE FOR INTERIM REVIEW AND NOT FOR CONSTRUCTION, BIDDING OR PERMIT PURPOSES.

RESPONSIBLE ENGINEER: BINKLEY & BARFIELD, INC.
MELODY OLIACH, PE
TEXAS REGISTRATION NO. 136949
8/2/2022

WILLIAMSON COUNTY

Binkley & Barfield
Binkley & Barfield, Inc.
Texas Reg. F-1017
2617 South Gessner Dr. Ste 200
Houston, Texas 77063
(713) 270-0999
www.binkleybarfield.com
consulting engineers

BAGDAD ROAD (CR 279)

DRAINAGE
PLAN AND PROFILE
STA 204+00 TO STA STA 216+00

SHEET 2 OF 13

FED. RD. DIV. NO.	PROJECT NO.		HIGHWAY NO.
			CR 279
STATE	DIST.	COUNTY	SHEET NO.
TEXAS		WILLIAMSON	150
CONT.	SECT.	JOB	

90% SUBMITTAL
PLOTDRIVER: TxDOT Mono.PDF_Gray.plt
PENTABLE: Bagdad.tbl
USER: chughes
FILE: ...\DRPP_BAGDAD_02.dgn
DATE: 8/2/2022 10:41:20 AM

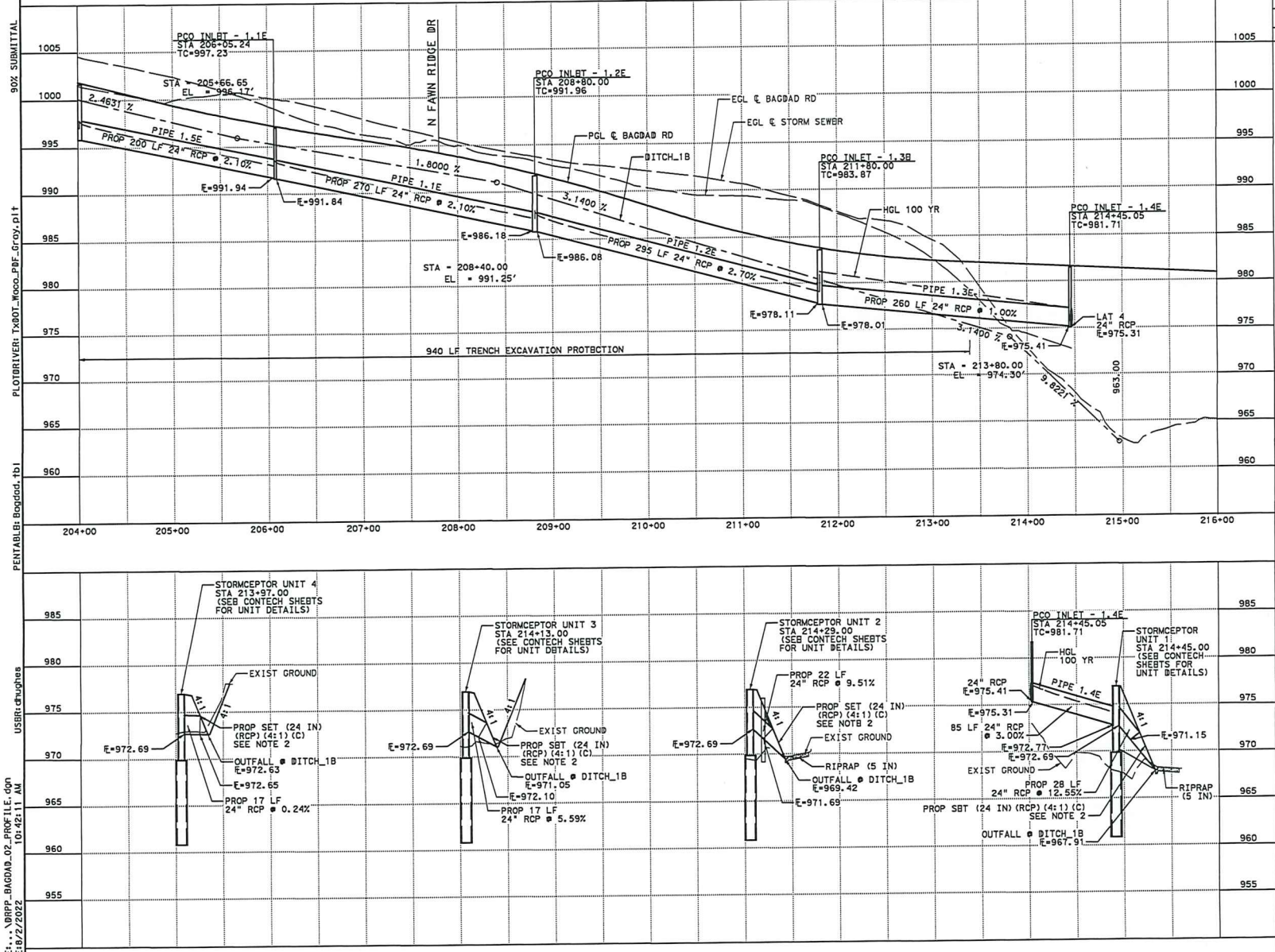

NO.	DATE	REVISION	APPROVED

HORZ 0' 25' 50' 100'
VERT 0' 5' 10'

NOTES:

1. SEE "DITCH DRAINAGE CALCULATIONS" SHEET FOR PROPOSED DITCH GEOMETRY.
2. SEE "SBTP-CD" STANDARD FOR ADDITIONAL DETAILS.

EXHIBIT B

THESE DOCUMENTS ARE FOR INTERIM REVIEW AND NOT FOR CONSTRUCTION, BIDDING OR PERMIT PURPOSES.

RESPONSIBLE ENGINEER:
BINKLEY & BARFIELD, INC.
MELODY QUACH, PE
TEXAS REGISTRATION NO. 136949

8/2/2022

WILLIAMSON COUNTY

Binkley & Barfield
consulting engineers

BAGDAD ROAD (CR 279)

DRAINAGE PROFILE

STA 204+00 TO STA 216+00

SHEET 3 OF 13

FED. RD. DIV. NO.	PROJECT NO.		HIGHWAY NO.
			CR 279
STATE	DIST.	COUNTY	SHEET NO.
TEXAS		WILLIAMSON	151
CONT.	SECT.	JOB	

90% SUBMITTAL
PLOTDRIVER: TxDOT_Waco_PDF_Gray.plt
PENTABLE: Bagdad.tbl
USER: dhughes
FILE: ...\DRPP_BAGDAD_02_PROFILE.dgn
DATE: 8/2/2022 10:42:11 AM

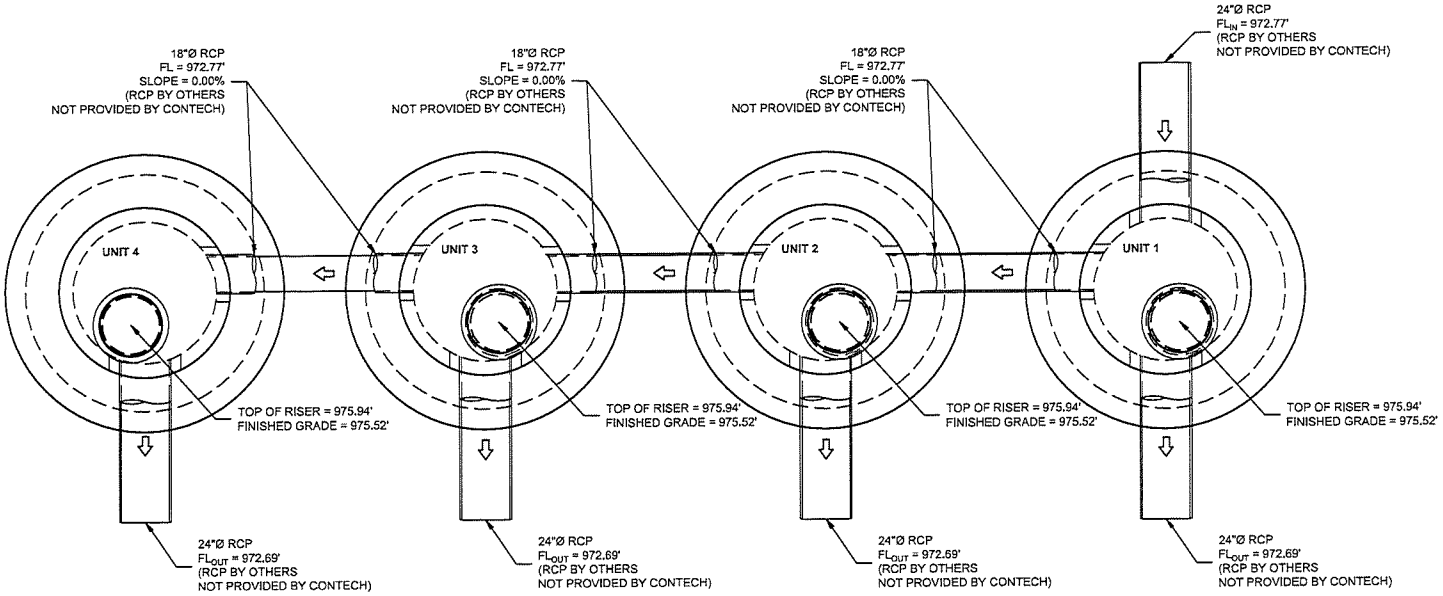

EXHIBIT FOR BAGDAD ROAD (CR 279)
PARALLEL ARRANGEMENT OF FOUR STORMCEPTOR STC-4800 UNITS

DESIGN SUMMARY: WATER ENTERS THROUGH THE 24"Ø RCP ON UNIT 1. FLOWS EQUALIZE ACROSS UNITS 1, 2, 3, & 4 VIA THE 18"Ø RCP EQUALIZERS. WATER IS EQUALLY TREATED AND RELEASED THROUGH THE 24"Ø RCP OUTLET ON EACH UNIT.
18"Ø RCP EQUALIZERS ARE FLAT (SLOPE = 0).
24"Ø RCP INLET PER PLAN.
24"Ø RCP OUTLETS PER PLAN.

EXHIBIT FOR CONCEPTUAL REFERENCE ONLY - REFER TO CIVIL PLANS FOR FINAL DESIGN.

MARK	DATE	REVISION DESCRIPTION	BY

EXHIBIT - 691545-010,020,030,040
BAGDAD ROAD (CR 279)
LIBERTY HILL, TX

CONTECH ENGINEERED SOLUTIONS LLC
www.ContechES.com
2201 C. Royal Lane, Suite 232, Irving, TX 75063
972.580.0300 972.580.0339 FAX

DATE: 4/29/2022	SCALE: VARIES
DESIGNED: SJ	DRAWN: SJ
CHECKED: SJ	APPROVED: SJ
PROJECT No.: 691545	SEQUENCE No.: 010,020,030,040
SHEET: 1 or 1	

The design of Stormceptor shown on this drawing is based upon information provided by CONTECH Construction Products Inc. or its agents, representatives or employees (CONTECH) at the time of preparation of the drawing. CONTECH makes no warranty as to the accuracy or completeness of such information. Any reliance on such information is at the sole risk of CONTECH. Failure to comply with any of the following may adversely affect the performance of the Stormceptor system: (1) Stormceptor must be installed in accordance with the applicable CONTECH drawings and specifications; and (2) Stormceptor must be operated and maintained in accordance with CONTECH's recommendations. CONTECH makes no liability for design, sale or use of Stormceptor except as expressly agreed to in writing by an officer of CONTECH.

J:\PROJECTS\CRVF01\JUPITER\NETIVERB\INPROJECTS\ACTIVE\691KO\691545\10-STORMCEPTOR\DRAWINGS\691545 STORMCEPTOR ASSEMBLY EXHIBIT.DWG 4/29/2022 2:15 PM

EXHIBIT B

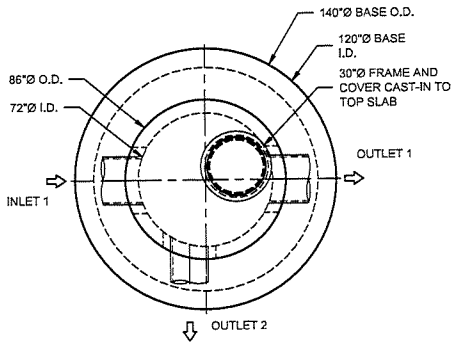

PLAN VIEW

INTERNALS NOT SHOWN

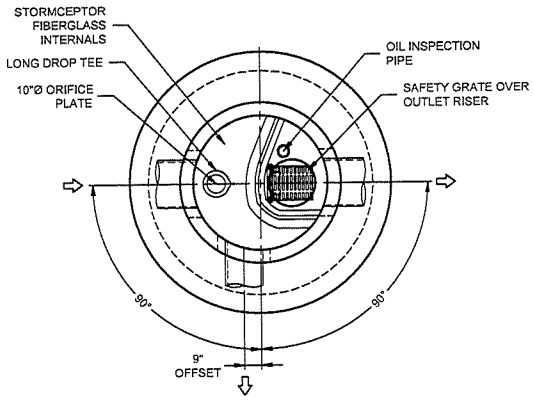

SECTION FOR PIPE ORIENTATION

TOP SLAB NOT SHOWN

CONTRACTOR TO INSTALL LONG DROP TEE AND OUTLET RISER EXTENSION ON-SITE. SEE INSTALLATION INSTRUCTIONS

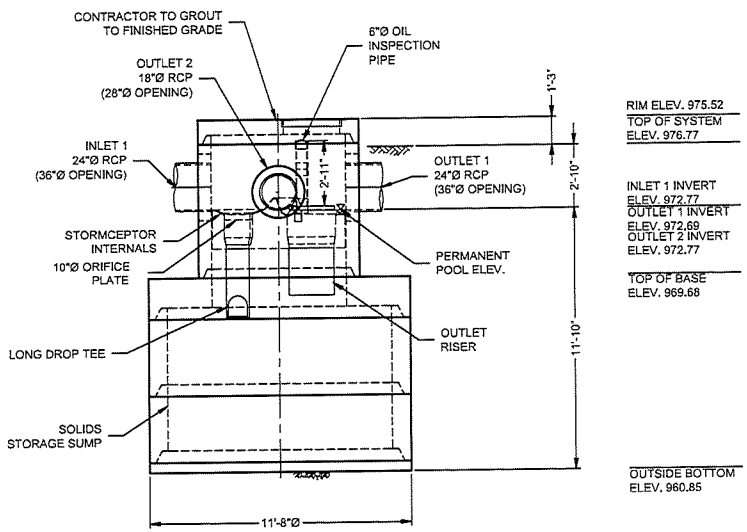

ELEVATION VIEW

MATERIAL LIST - PROVIDED BY CONTECH

COUNT	DESCRIPTION	INSTALLED BY
1	STC4800 6'Ø FIBERGLASS MULTI INSERT, STD	CONTECH
1	FIBERGLASS LONG DROP TEE	CONTRACTOR
1	FIBERGLASS 24"Ø OUTLET RISER EXTENSION PIPE	CONTRACTOR
1	FIBERGLASS 10"Ø ORIFICE PLATE	CONTRACTOR
1	ALUMINUM 24" SAFETY GRATE	CONTECH
2	6"Ø PVC OIL INSPECTION PIPE	CONTECH
1	6"Ø PVC COUPLING	CONTECH
1	SEALANT FOR JOINTS	CONTRACTOR
1	6"Ø SDR 35 SCREW PLUG	CONTECH
1	6"Ø SDR 35 CLEAN OUT ADAPTER W/ O RING (GxMPT)	CONTECH
1	30"Ø X 4" FRAME AND COVER, EJ #41600483, OR EQUIV., CAST-IN	CONTECH

GENERAL NOTES

1. CONTECH TO PROVIDE ALL MATERIALS UNLESS NOTED OTHERWISE.
2. FOR FABRICATION DRAWINGS WITH DETAILED STRUCTURE DIMENSIONS AND WEIGHTS, PLEASE CONTACT YOUR CONTECH REPRESENTATIVE. www.ContechES.com
3. STORMCEPTOR WATER QUALITY STRUCTURE SHALL BE IN ACCORDANCE WITH ALL DESIGN DATA AND INFORMATION CONTAINED IN THIS DRAWING. CONTRACTOR TO CONFIRM STRUCTURE MEETS REQUIREMENTS OF PROJECT.
4. STRUCTURE SHALL MEET AASHTO HS-20 LOAD RATING, ASSUMING EARTH COVER OF 0' - 2', AND GROUNDWATER ELEVATION AT, OR BELOW, THE OUTLET PIPE INVERT ELEVATION. ENGINEER OF RECORD TO CONFIRM ACTUAL GROUNDWATER ELEVATION. CASTINGS SHALL MEET AASHTO M306 AND BE CAST WITH THE CONTECH LOGO.
5. STORMCEPTOR STRUCTURE SHALL BE PRECAST CONCRETE CONFORMING TO ASTM C-478 AND AASHTO LOAD FACTOR DESIGN METHOD.

INSTALLATION NOTES

A. ANY SUB-BASE, BACKFILL DEPTH, AND/OR ANTI-FLOTATION PROVISIONS ARE SITE-SPECIFIC DESIGN CONSIDERATIONS AND SHALL BE SPECIFIED BY ENGINEER OF RECORD.
B. CONTRACTOR TO PROVIDE EQUIPMENT WITH SUFFICIENT LIFTING AND REACH CAPACITY TO LIFT AND SET THE STORMCEPTOR MANHOLE STRUCTURE.
C. CONTRACTOR TO ADD JOINT SEALANT BETWEEN ALL STRUCTURE SECTIONS, AND ASSEMBLE STRUCTURE.
D. CONTRACTOR TO PROVIDE, INSTALL, AND GROUT PIPES. MATCH PIPE INVERTS WITH ELEVATIONS SHOWN. ALL PIPE CENTERLINES TO MATCH PIPE OPENING CENTERLINES.
E. CONTRACTOR TO TAKE APPROPRIATE MEASURES TO ASSURE UNIT IS WATER TIGHT, HOLDING WATER TO FLOWLINE INVERT MINIMUM. IT IS SUGGESTED THAT ALL JOINTS BELOW PIPE INVERTS ARE GROUTED.

STRUCTURE WEIGHT

APPROXIMATE HEAVIEST PICK = 18000 LBS.
OF 6 PIECES

MAXIMUM FOOTPRINT = 11.67'Ø

CONTECH
CONTRACT
DRAWING

SLY
LAYOUT 1A/1B

MARK	DATE	REVISION DESCRIPTION	BY

STC4800 - 691545-010
BAGDAD ROAD (CR 279)
LIBERTY HILL, TX
SITE DESIGNATION: UNIT 1

CONTECH ENGINEERED SOLUTIONS LLC
www.ContechES.com
1001 SCHERVIER PKWY, SUITE 150 WESTERVILLE, OH 43081
800.338.1122 513.645.7000 513.645.7993 FAX
Stormceptor®

DATE: 04/14/22	
DESIGNED: SJ	DRAWN: SEL
CHECKED: SJ	APPROVED: SJ
PROJECT No.: 691545	SEQUENCE No.: 010
SHEET: 1 OF 1	

EXHIBIT B

1810B4 V1600-4 Assembly

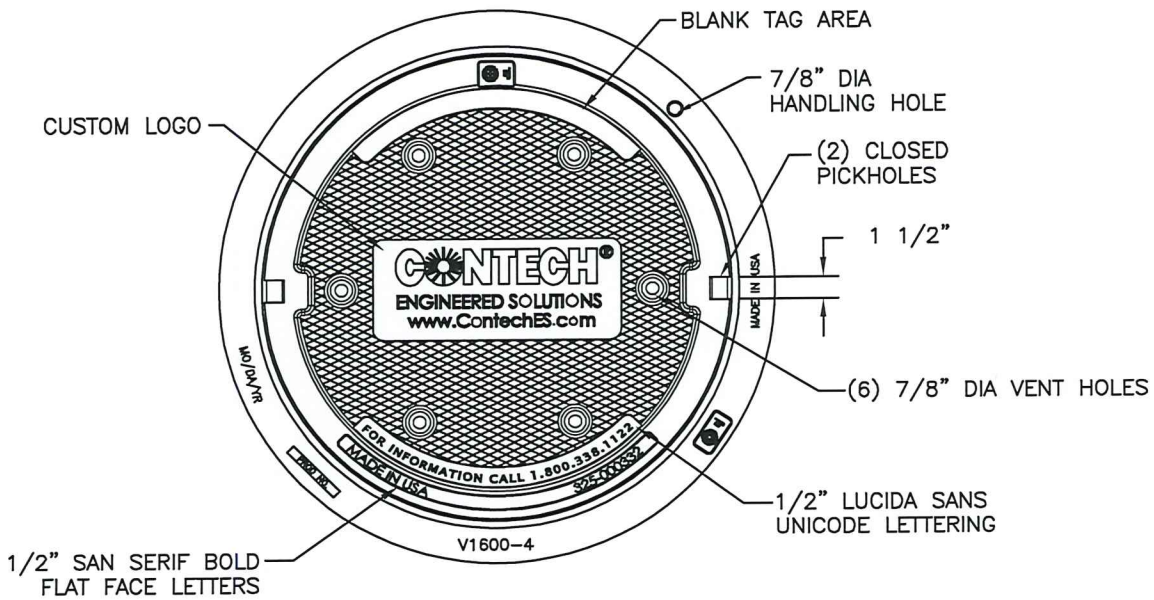

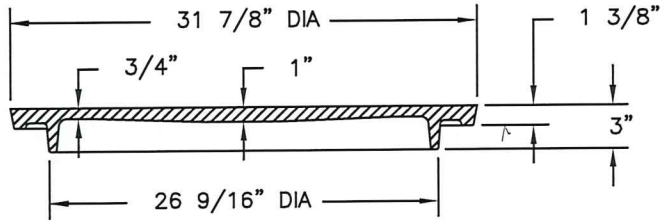

COVER SECTION

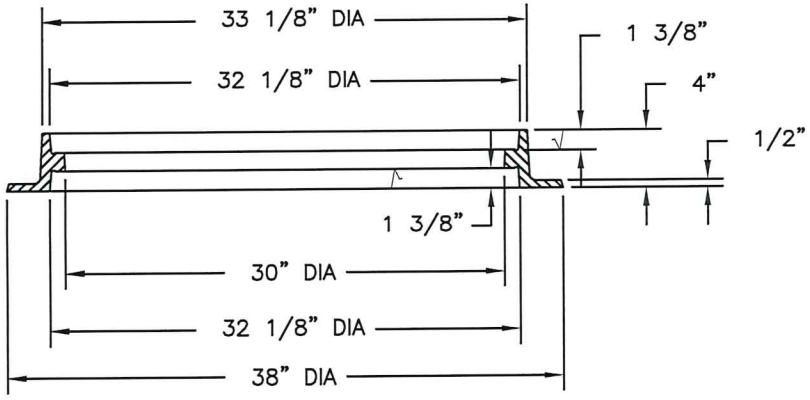

FRAME SECTION

EXHIBIT B

Product Number

41600483

Design Features

-Materials
  Cover
    Gray Iron (CL35B)
  Frame
    Gray Iron (CL35B)

-Design Load
  Heavy Duty
-Open Area
  n/a
-Coating
  Undipped
-√ Designates Machined Surface

Certification

-
-ASTM A48
-
-Country of Origin: USA

Major Components

00180783
41600410

Drawing Revision

05/09/2007 Designer: SMH
6/26/2017 Revised By: DAE

Disclaimer

Weights (lbs./kg) dimensions (inches/mm) and drawings provided for your guidance. We reserve the right to modify specifications without prior notice.

CONFIDENTIAL: This drawing is the property of EJ GROUP, Inc., and embodies confidential information, registered marks, patents, trade secret information, and/or know how that is the property of EJ GROUP, Inc.
Copyright © 2012 EJ GROUP, Inc.
All rights reserved.

Contact

800 626 4653
ejco.com

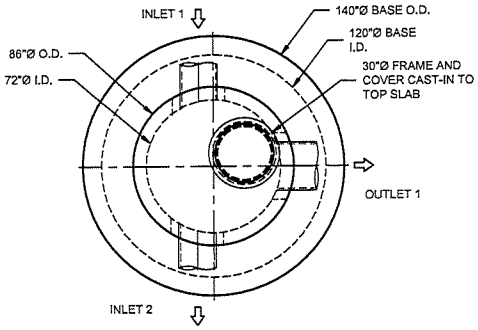

PLAN VIEW

INTERNALS NOT SHOWN

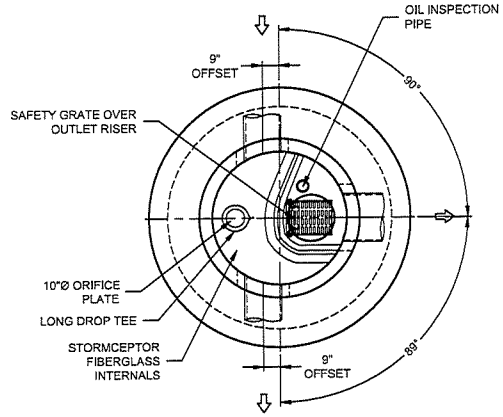

SECTION FOR PIPE ORIENTATION

TOP PLAN NOT SHOWN

CONTRACTOR TO INSTALL LONG DROP TEE AND OUTLET RISER EXTENSION ON-SITE. SEE INSTALLATION INSTRUCTIONS

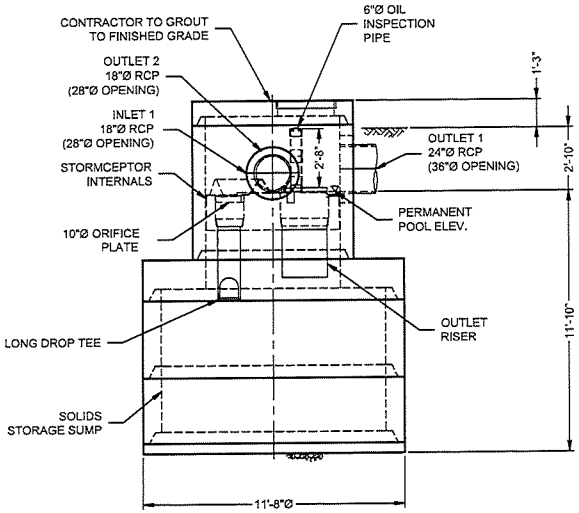

ELEVATION VIEW

CONTECH
CONTRACT
DRAWING

MATERIAL LIST - PROVIDED BY CONTECH

COUNT	DESCRIPTION	INSTALLED BY
1	STC4800 6'Ø FIBERGLASS MULTI INSERT, STD	CONTECH
1	FIBERGLASS LONG DROP TEE	CONTRACTOR
1	FIBERGLASS 24"Ø OUTLET RISER EXTENSION PIPE	CONTRACTOR
1	FIBERGLASS 10"Ø ORIFICE PLATE	CONTRACTOR
1	ALUMINUM 24" SAFETY GRATE	CONTECH
2	6"Ø PVC OIL INSPECTION PIPE	CONTECH
1	6"Ø PVC COUPLING	CONTECH
1	6"Ø SDR 35 SCREW PLUG	CONTECH
1	6"Ø SDR 35 CLEAN OUT ADAPTER W/ O RING (GxMPT)	CONTECH
1	SEALANT FOR JOINTS	CONTRACTOR
1	30"Ø X 4" FRAME AND COVER, EJ #41600483, OR EQUIV., CAST-IN	CONTECH

GENERAL NOTES

1. CONTECH TO PROVIDE ALL MATERIALS UNLESS NOTED OTHERWISE.
2. FOR FABRICATION DRAWINGS WITH DETAILED STRUCTURE DIMENSIONS AND WEIGHTS, PLEASE CONTACT YOUR CONTECH REPRESENTATIVE. www.ContechES.com
3. STORMCEPTOR WATER QUALITY STRUCTURE SHALL BE IN ACCORDANCE WITH ALL DESIGN DATA AND INFORMATION CONTAINED IN THIS DRAWING. CONTRACTOR TO CONFIRM STRUCTURE MEETS REQUIREMENTS OF PROJECT.
4. STRUCTURE SHALL MEET AASHTO HS-20 LOAD RATING, ASSUMING EARTH COVER OF 0' - 2', AND GROUNDWATER ELEVATION AT, OR BELOW, THE OUTLET PIPE INVERT ELEVATION. ENGINEER OF RECORD TO CONFIRM ACTUAL GROUNDWATER ELEVATION. CASTINGS SHALL MEET AASHTO M306 AND BE CAST WITH THE CONTECH LOGO.
5. STORMCEPTOR STRUCTURE SHALL BE PRECAST CONCRETE CONFORMING TO ASTM C-478 AND AASHTO LOAD FACTOR DESIGN METHOD.

INSTALLATION NOTES

A. ANY SUB-BASE, BACKFILL DEPTH, AND/OR ANTI-FLOTATION PROVISIONS ARE SITE-SPECIFIC DESIGN CONSIDERATIONS AND SHALL BE SPECIFIED BY ENGINEER OF RECORD.
B. CONTRACTOR TO PROVIDE EQUIPMENT WITH SUFFICIENT LIFTING AND REACH CAPACITY TO LIFT AND SET THE STORMCEPTOR MANHOLE STRUCTURE.
C. CONTRACTOR TO ADD JOINT SEALANT BETWEEN ALL STRUCTURE SECTIONS, AND ASSEMBLE STRUCTURE.
D. CONTRACTOR TO PROVIDE, INSTALL, AND GROUT PIPES. MATCH PIPE INVERTS WITH ELEVATIONS SHOWN. ALL PIPE CENTERLINES TO MATCH PIPE OPENING CENTERLINES.
E. CONTRACTOR TO TAKE APPROPRIATE MEASURES TO ASSURE UNIT IS WATER TIGHT, HOLDING WATER TO FLOWLINE INVERT MINIMUM. IT IS SUGGESTED THAT ALL JOINTS BELOW PIPE INVERTS ARE GROUTED.

STRUCTURE WEIGHT
APPROXIMATE HEAVIEST PICK = 18000 LBS.
OF 6 PIECES
MAXIMUM FOOTPRINT = 11.67'Ø

SLY
LAYOUT 1A/1B

MARK	DATE	REVISION DESCRIPTION	BY

STC4800 - 691545-020
BAGDAD ROAD (CR 279)
LIBERTY HILL, TX
SITE DESIGNATION: UNIT 2

CONTECH ENGINEERED SOLUTIONS LLC
www.ContechES.com
Stormceptor

DATE: 04/22/22	
DESIGNED: SJ	DRAWN: SEL
CHECKED: SJ	APPROVED: SJ
PROJECT No.: 691545	SEQUENCE No.: 020
SHEET: 1 OF 1	

EXHIBIT B

1810B4 V1600-4 Assembly

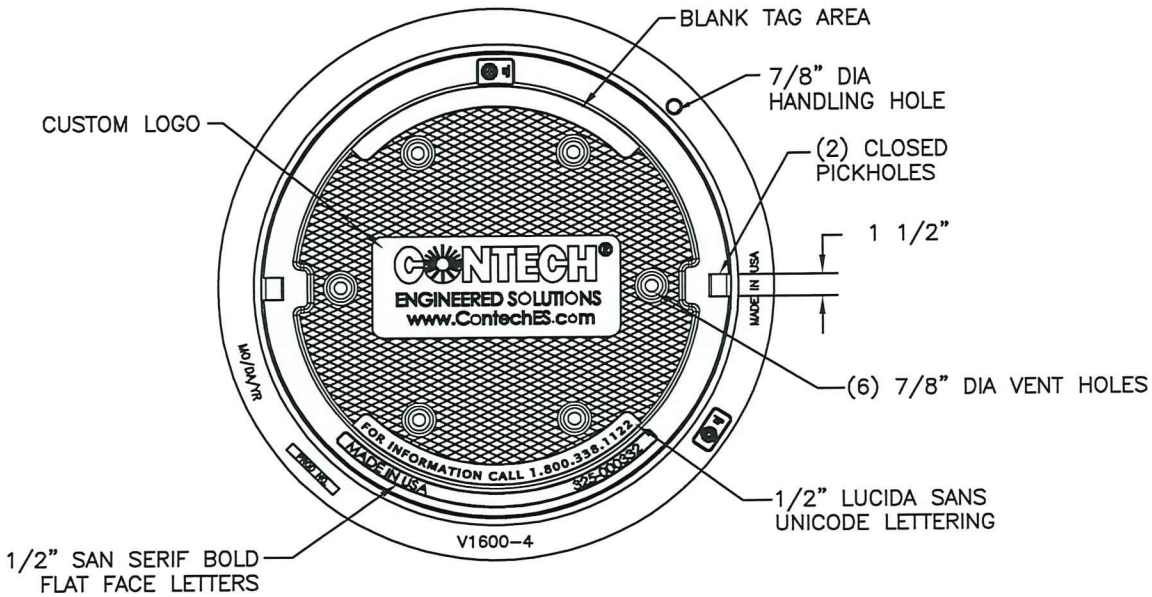

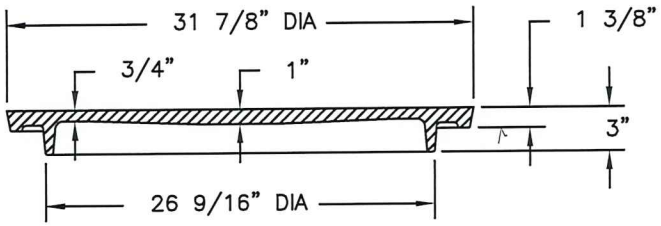

COVER SECTION

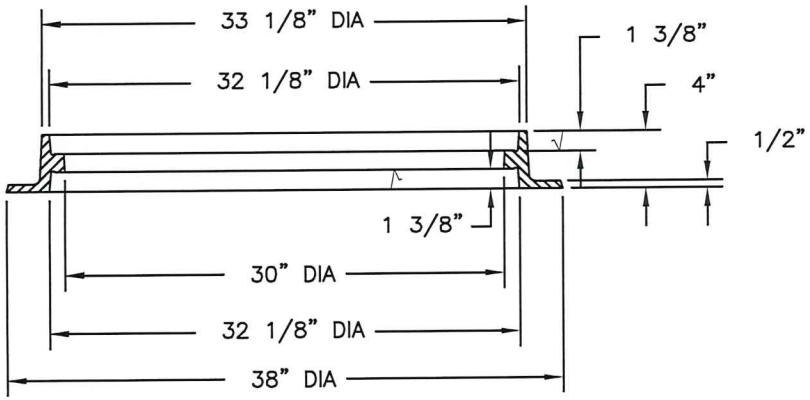

FRAME SECTION

EXHIBIT B

Product Number

41600483

Design Features

-Materials
  Cover
    Gray Iron (CL35B)
  Frame
    Gray Iron (CL35B)

-Design Load
  Heavy Duty
-Open Area
  n/a
-Coating
  Undipped
-√Designates Machined Surface

Certification

-
-ASTM A48
-
-Country of Origin: USA

Major Components

00180783
41600410

Drawing Revision

05/09/2007 Designer: SMH
6/26/2017 Revised By: DAE

Disclaimer

Weights (lbs./kg) dimensions (inches/mm) and drawings provided for your guidance. We reserve the right to modify specifications without prior notice.

CONFIDENTIAL: This drawing is the property of EJ GROUP, Inc., and embodies confidential information, registered marks, patents, trade secret information, and/or know how that is the property of EJ GROUP, Inc. Copyright © 2012 EJ GROUP, Inc. All rights reserved.

Contact

800 626 4653
ejco.com

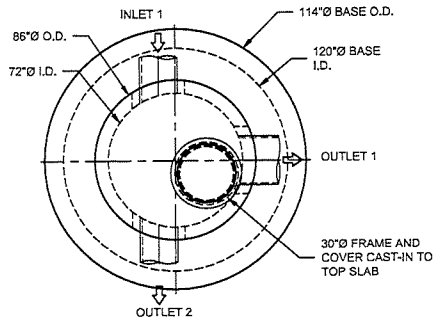

PLAN VIEW

INTERNALS NOT SHOWN

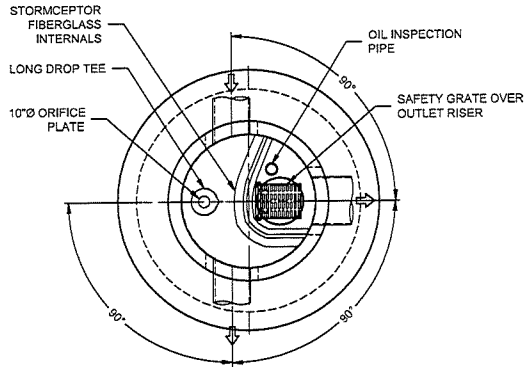

SECTION FOR PIPE ORIENTATION

TOP SLAB NOT SHOWN

CONTRACTOR TO INSTALL LONG DROP TEE AND OUTLET RISER EXTENSION ON-SITE. SEE INSTALLATION INSTRUCTIONS

TOP OF STRUCTURE WILL BE ABOVE FINISHED GRADE BY 0.58' FOR ALL STORMCEPTOR UNITS.

MATERIAL LIST - PROVIDED BY CONTECH

COUNT	DESCRIPTION	INSTALLED BY
1	STC4800 6'Ø FIBERGLASS MULTI INSERT, STD	CONTECH
1	FIBERGLASS LONG DROP TEE	CONTRACTOR
1	FIBERGLASS 24"Ø OUTLET RISER EXTENSION PIPE	CONTRACTOR
1	FIBERGLASS 10"Ø ORIFICE PLATE	CONTRACTOR
1	ALUMINUM 24" SAFETY GRATE	CONTECH
2	6"Ø PVC OIL INSPECTION PIPE	CONTECH
1	6"Ø PVC COUPLING	CONTECH
1	6"Ø SDR 35 SCREW PLUG	CONTECH
1	6"Ø SER 35 CLEAN OUT ADAPTER W/ O RING (GXMPT)	CONTECH
1	SEALANT FOR JOINTS	CONTRACTOR
1	30"Ø X 4" FRAME AND COVER, EJ #41600483, OR EQUIV., CAST-IN	CONTECH

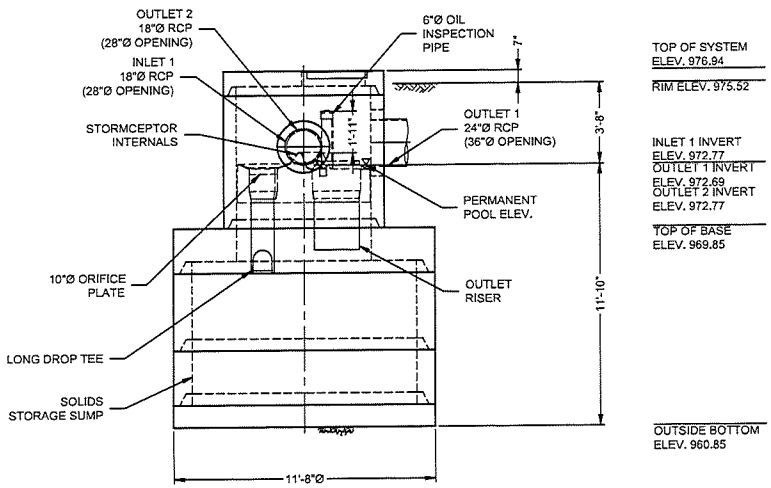

ELEVATION VIEW

GENERAL NOTES

1. CONTECH TO PROVIDE ALL MATERIALS UNLESS NOTED OTHERWISE.
2. FOR FABRICATION DRAWINGS WITH DETAILED STRUCTURE DIMENSIONS AND WEIGHTS, PLEASE CONTACT YOUR CONTECH REPRESENTATIVE. www.ContechES.com
3. STORMCEPTOR WATER QUALITY STRUCTURE SHALL BE IN ACCORDANCE WITH ALL DESIGN DATA AND INFORMATION CONTAINED IN THIS DRAWING. CONTRACTOR TO CONFIRM STRUCTURE MEETS REQUIREMENTS OF PROJECT.
4. STRUCTURE SHALL MEET AASHTO HS-20 LOAD RATING, ASSUMING EARTH COVER OF 0' - 2', AND GROUNDWATER ELEVATION AT, OR BELOW, THE OUTLET PIPE INVERT ELEVATION. ENGINEER OF RECORD TO CONFIRM ACTUAL GROUNDWATER ELEVATION. CASTINGS SHALL MEET AASHTO M306 AND BE CAST WITH THE CONTECH LOGO.
5. STORMCEPTOR STRUCTURE SHALL BE PRECAST CONCRETE CONFORMING TO ASTM C-478 AND AASHTO LOAD FACTOR DESIGN METHOD.

INSTALLATION NOTES

A. ANY SUB-BASE, BACKFILL DEPTH, AND/OR ANTI-FLOTATION PROVISIONS ARE SITE-SPECIFIC DESIGN CONSIDERATIONS AND SHALL BE SPECIFIED BY ENGINEER OF RECORD.
B. CONTRACTOR TO PROVIDE EQUIPMENT WITH SUFFICIENT LIFTING AND REACH CAPACITY TO LIFT AND SET THE STORMCEPTOR MANHOLE STRUCTURE.
C. CONTRACTOR TO ADD JOINT SEALANT BETWEEN ALL STRUCTURE SECTIONS, AND ASSEMBLE STRUCTURE.
D. CONTRACTOR TO PROVIDE, INSTALL, AND GROUT PIPES. MATCH PIPE INVERTS WITH ELEVATIONS SHOWN. ALL PIPE CENTERLINES TO MATCH PIPE OPENING CENTERLINES.
E. CONTRACTOR TO TAKE APPROPRIATE MEASURES TO ASSURE UNIT IS WATER TIGHT, HOLDING WATER TO FLOWLINE INVERT MINIMUM. IT IS SUGGESTED THAT ALL JOINTS BELOW PIPE INVERTS ARE GROUTED.

STRUCTURE WEIGHT
APPROXIMATE HEAVIEST PICK = 20500 LBS.
OF 6 PIECES

CONTECH
CONTRACT
DRAWING

SLY
LAYOUT 1A/1B

MARK	DATE	REVISION DESCRIPTION	BY

STC4800 - 691545-030
BAGDAD ROAD (CR 279)
LIBERTY HILL, TX
SITE DESIGNATION: UNIT 3

CONTECH ENGINEERED SOLUTIONS LLC
www.ContechES.com
1001 Grant Avenue, Suite 101 Bloomsburg, CHICAGO
800.338.1122 513.645.7000 513.645.7993 FAX

Stormceptor®

DATE: 04/15/2022	
DESIGNED: SJ	DRAWN: BAA
CHECKED: SJ	APPROVED: SJ
PROJECT No.: 691545	SEQUENCE No.: 030
SHEET: 1 OF 1	

IVERLIN/PROJECTS/TX/E691500/691545/691545-30/STORMCEPTOR/DRAWING/691545-030-STC4800-CON-FAB-4-21-2022.DWG 4/21/2022 12:04 PM

EXHIBIT B

1810B4 V1600-4 Assembly

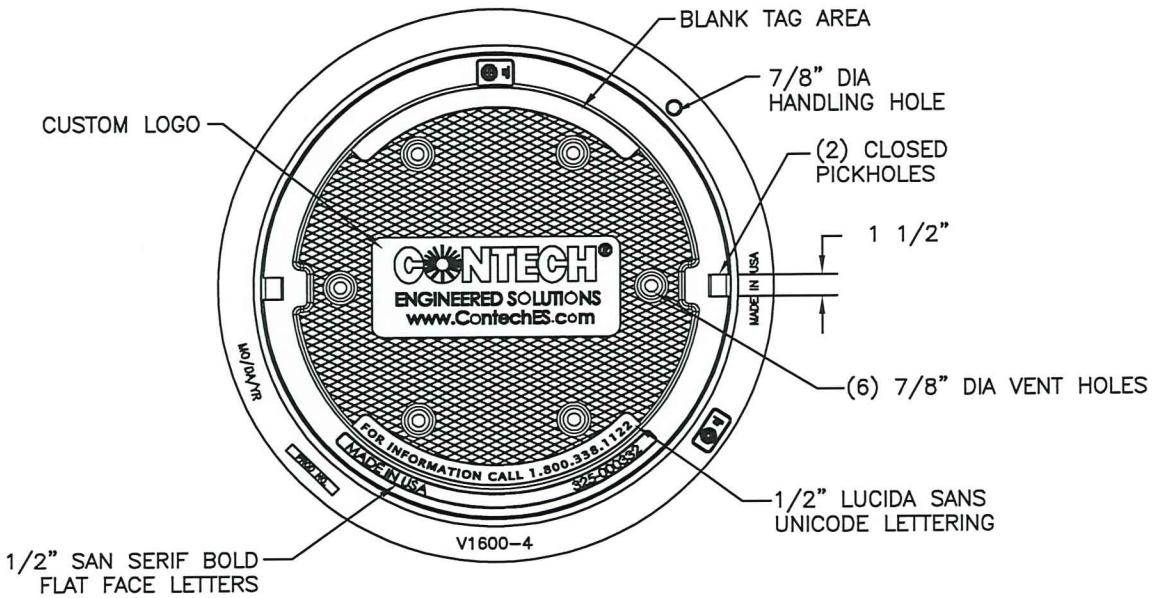

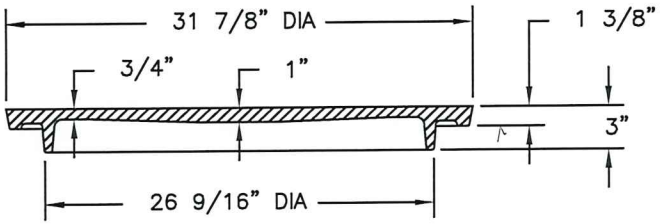

COVER SECTION

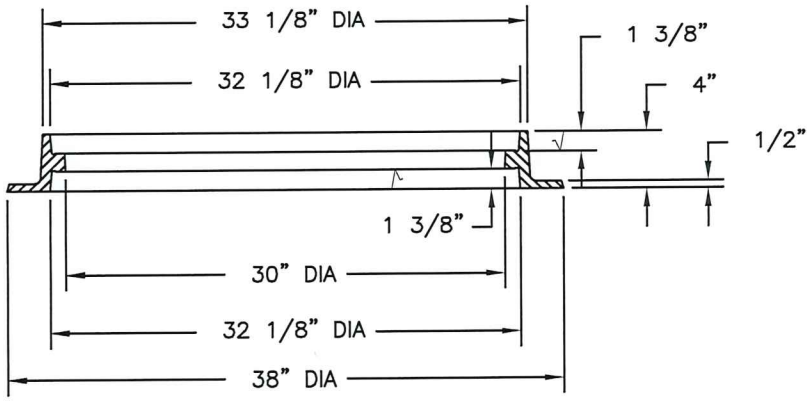

FRAME SECTION

EXHIBIT B

Product Number

41600483

Design Features

-Materials
  Cover
    Gray Iron (CL35B)
  Frame
    Gray Iron (CL35B)

-Design Load
  Heavy Duty
-Open Area
  n/a
-Coating
  Undipped
-√Designates Machined Surface

Certification

-
-ASTM A48
-
-Country of Origin: USA

Major Components

00180783
41600410

Drawing Revision

05/09/2007 Designer: SMH
6/26/2017 Revised By: DAE

Disclaimer

Weights (lbs./kg) dimensions (inches/mm) and drawings provided for your guidance. We reserve the right to modify specifications without prior notice.

CONFIDENTIAL: This drawing is the property of EJ GROUP, Inc., and embodies confidential information, registered marks, patents, trade secret information, and/or know how that is the property of EJ GROUP, Inc. Copyright © 2012 EJ GROUP, Inc. All rights reserved.

Contact

800 626 4653
ejco.com

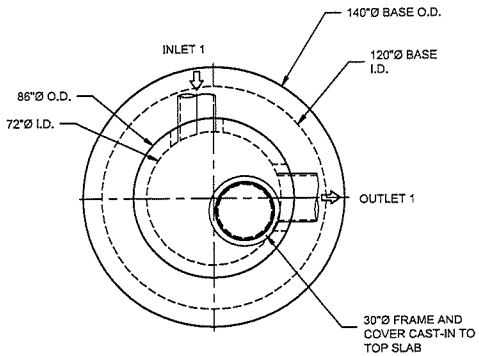

PLAN VIEW

INTERNALS NOT SHOWN

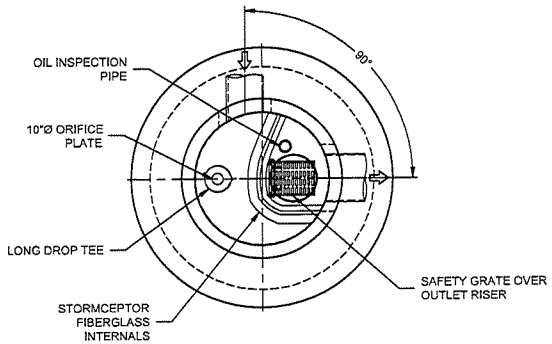

SECTION FOR PIPE ORIENTATION

TOP SLAB NOT SHOWN

CONTRACTOR TO INSTALL LONG DROP TEE AND OUTLET RISER EXTENSION ON-SITE. SEE INSTALLATION INSTRUCTIONS

TOP OF STRUCTURE WILL BE ABOVE FINISHED GRADE BY 0.58' FOR ALL STORMCEPTOR UNITS.

MATERIAL LIST - PROVIDED BY CONTECH

COUNT	DESCRIPTION	INSTALLED BY
1	STC4800 6'Ø FIBERGLASS MULTI INSERT, STD	CONTECH
1	FIBERGLASS LONG DROP TEE	CONTRACTOR
1	FIBERGLASS 24"Ø OUTLET RISER EXTENSION PIPE	CONTRACTOR
1	FIBERGLASS 10"Ø ORIFICE PLATE	CONTRACTOR
1	ALUMINUM 24" SAFETY GRATE	CONTECH
2	6"Ø PVC OIL INSPECTION PIPE	CONTECH
1	6"Ø PVC COUPLING	CONTECH
1	6"Ø SDR 35 SCREW PLUG	CONTECH
1	6"Ø SER 35 CLEAN OUT APAPTER W/ "O" RING (GXMPT)	CONTECH
1	SEALANT FOR JOINTS	CONTRACTOR
1	30"Ø X 4" FRAME AND COVER, EJ #41600483, OR EQUIV., CAST-IN	CONTECH

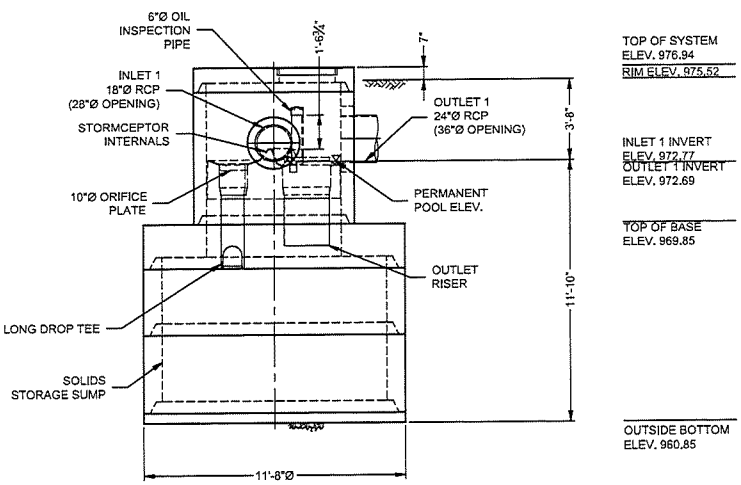

ELEVATION VIEW

GENERAL NOTES

1. CONTECH TO PROVIDE ALL MATERIALS UNLESS NOTED OTHERWISE.
2. FOR FABRICATION DRAWINGS WITH DETAILED STRUCTURE DIMENSIONS AND WEIGHTS, PLEASE CONTACT YOUR CONTECH REPRESENTATIVE. www.ContechES.com
3. STORMCEPTOR WATER QUALITY STRUCTURE SHALL BE IN ACCORDANCE WITH ALL DESIGN DATA AND INFORMATION CONTAINED IN THIS DRAWING. CONTRACTOR TO CONFIRM STRUCTURE MEETS REQUIREMENTS OF PROJECT.
4. STRUCTURE SHALL MEET AASHTO HS-20 LOAD RATING, ASSUMING EARTH COVER OF 0' - 2', AND GROUNDWATER ELEVATION AT, OR BELOW, THE OUTLET PIPE INVERT ELEVATION. ENGINEER OF RECORD TO CONFIRM ACTUAL GROUNDWATER ELEVATION. CASTINGS SHALL MEET AASHTO M306 AND BE CAST WITH THE CONTECH LOGO.
5. STORMCEPTOR STRUCTURE SHALL BE PRECAST CONCRETE CONFORMING TO ASTM C-478 AND AASHTO LOAD FACTOR DESIGN METHOD.

INSTALLATION NOTES

A. ANY SUB-BASE, BACKFILL DEPTH, AND/OR ANTI-FLOTATION PROVISIONS ARE SITE-SPECIFIC DESIGN CONSIDERATIONS AND SHALL BE SPECIFIED BY ENGINEER OF RECORD.
B. CONTRACTOR TO PROVIDE EQUIPMENT WITH SUFFICIENT LIFTING AND REACH CAPACITY TO LIFT AND SET THE STORMCEPTOR MANHOLE STRUCTURE.
C. CONTRACTOR TO ADD JOINT SEALANT BETWEEN ALL STRUCTURE SECTIONS, AND ASSEMBLE STRUCTURE.
D. CONTRACTOR TO PROVIDE, INSTALL, AND GROUT PIPES. MATCH PIPE INVERTS WITH ELEVATIONS SHOWN. ALL PIPE CENTERLINES TO MATCH PIPE OPENING CENTERLINES.
E. CONTRACTOR TO TAKE APPROPRIATE MEASURES TO ASSURE UNIT IS WATER TIGHT, HOLDING WATER TO FLOWLINE INVERT MINIMUM. IT IS SUGGESTED THAT ALL JOINTS BELOW PIPE INVERTS ARE GROUTED.

STRUCTURE WEIGHT
APPROXIMATE HEAVIEST PICK = 20500 LBS.
OF 5 PIECES

CONTECH
CONTRACT
DRAWING

SLY
LAYOUT 1A/1B

MARK	DATE	REVISION DESCRIPTION	BY

STC4800 - 691545-040
BAGDAD ROAD (CR 279)
LIBERTY HILL, TX
SITE DESIGNATION: UNIT 4

CONTECH ENGINEERED SOLUTIONS LLC
www.ContechES.com
9025 Centre Pointe Dr., Suite 400, West Chester, OH 45069
800.338.1122 513.645.7000 513.645.7993 FAX

Stormceptor®
FOR USE IN STORMWATER MANAGEMENT SYSTEMS ONLY

DATE: 04/18/2022	
DESIGNED: SJ	DRAWN: BAA
CHECKED: SJ	APPROVED: SJ
PROJECT No.: 691545	SEQUENCE No.: 040
SHEET: 1 OF 1	

EXHIBIT B

1810B4 V1600-4 Assembly

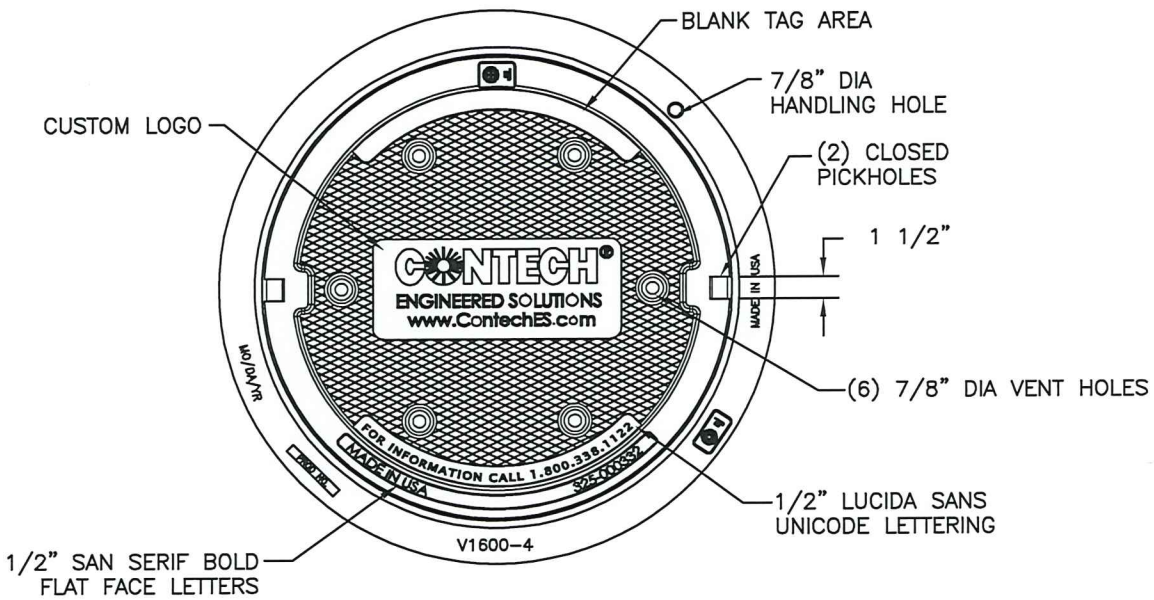

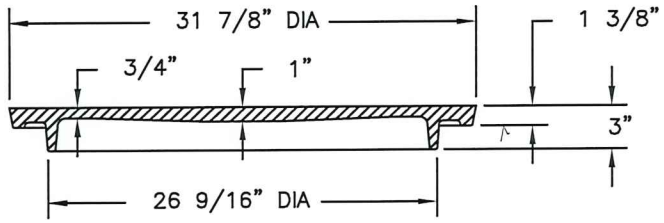

COVER SECTION

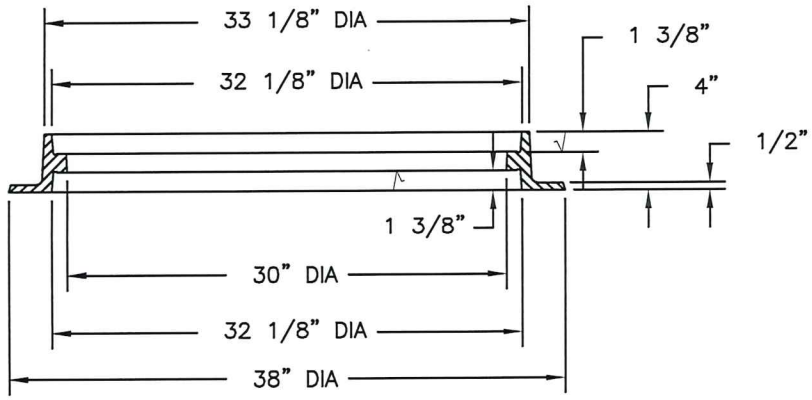

FRAME SECTION

EXHIBIT B

Product Number

41600483

Design Features

-Materials
  Cover
    Gray Iron (CL35B)
  Frame
    Gray Iron (CL35B)

-Design Load
  Heavy Duty
-Open Area
  n/a
-Coating
  Undipped
-√ Designates Machined Surface

Certification

-
-ASTM A48
-
-Country of Origin: USA

Major Components

00180783
41600410

Drawing Revision

05/09/2007 Designer: SMH
6/26/2017 Revised By: DAE

Disclaimer

Weights (lbs./kg) dimensions (inches/mm) and drawings provided for your guidance. We reserve the right to modify specifications without prior notice.

CONFIDENTIAL: This drawing is the property of EJ GROUP, Inc., and embodies confidential information, registered marks, patents, trade secret information, and/or know how that is the property of EJ GROUP, Inc.
Copyright © 2012 EJ GROUP, Inc.
All rights reserved.

Contact

800 626 4653
ejco.com

INTERLOCAL AGREEMENT BETWEEN THE CITY OF LEANDER AND WILLIAMSON COUNTY REGARDING THE DESIGN AND CONSTRUCTION OF BAGDAD ROAD FROM THE CITY LIMITS OF LIBERTY HILL, TEXAS TO SOUTH OF CR 281 LYING WITHIN THE LEANDER CITY LIMITS

THE STATE OF TEXAS	§	
	§	KNOW ALL BY THESE PRESENTS:
COUNTY OF WILLIAMSON	§	

THIS INTERLOCAL AGREEMENT ("**Agreement"**) is entered into between the City of Leander, Texas, a Texas municipal corporation (the "**City**") and Williamson County, a political subdivision of the State of Texas (the "**County**"). In this Agreement, the City and the County are sometimes individually referred to as "**a Party**" and collectively referred to as "**the Parties**".

WHEREAS, V.T.C.A., Government Code, Chapter 791, the Texas Interlocal Cooperation Act, provides that any one or more public agencies may contract with each other for the performance of governmental functions or services for the promotion and protection of the health and welfare of the inhabitants of this State and the mutual benefit of the parties;

WHEREAS, the County is and has been in the process of designing Bagdad Road from the city limits of Leander, Texas to south of CR 281 the approximate location being shown on Exhibit "A", attached hereto, (the "County Project"); and

WHEREAS, the City desires to cooperate with the County to facilitate the construction of the County Project; and

NOW, THEREFORE, in consideration of the foregoing premises and the mutual promises and agreements of the Parties contained in this Agreement, the Parties agree as follows:

I.
PURPOSE

1.01 General. The purpose of this Agreement is to provide formal coordination and consent for the County's design and construction of the County Project within the city limits and requiring the City to maintain certain water quality features as further described herein.

II.
DESIGN OF COUNTY PROJECT

2.01 County Obligations. The County shall be responsible for all costs associated with the construction bidding and management, right-of-way acquisitions, utility relocations and all other costs related to the design and construction of the County Project.

Formatted: Justified

2.02. Maintenance. The County agrees to operate and maintain the County Project until the City annexes any property abutting a portion or portions of Bagdad Road, except for the water quality features as described in Section 3.02, below.

2.02. Insurance, Bonds and Warranties. The County shall require the County Project Contractor to name the City as an additional insured on any policies related to the County Project. The County shall require the contractor to provide performance bonds and maintenance bonds in favor of the City for the portions of the County Project operated and maintained by the County in minimum amounts required under Williamson County bond program construction contracts, and generally in the form as set out in Exhibit "B" attached hereto. The County shall transfer all warranties for the County Project to the City upon final completion and acceptance of the Project, or City annexation of any property abutting portions of Bagdad Road.

The County shall require the County Project contractor to issue a minimum construction warranty period of two (2) years from the formal acceptance of entire project completion.

Formatted: Font: Bold

III.

CITY OBLIGATIONS

3.01 Right-of-way. The City agrees that ~~to allow~~ the County shall be permitted to exercise its power of eminent domain within the city limits if necessary to acquire property rights for the County Project. ~~within the city limits.~~

Formatted: Justified

3.02. Water Quality Features. The City agrees to own, operate and maintain the water quality features portion of the County Project as shown in Exhibit "C~~B~~", attached hereto (the "Water Quality Features"). Prior to acceptance of ownership by City, the City and County shall designate representatives to conduct a final walk-through inspection of the Water Quality Features to identify and remedy any construction defects, or to otherwise confirm acceptance of the construction.

Formatted: Justified

IV.
GENERAL PROVISIONS

4.01 Authority. This Agreement is made in part under the authority conferred in Chapter 791, *Texas Government Code*

4.02 Term. This Agreement shall commence upon execution of this Agreement and shall end upon the completion of the County Project.

4.03 Severability. The provisions of this Agreement are severable and, if any provision of this Agreement is held to be invalid for any reason by a court or agency of competent jurisdiction, the remainder of this Agreement will not be effected and this Agreement will be construed as if the invalid portion had never been contained herein.

4.04 Default and Remedies. In the event that the City defaults under this Agreement, and such default is not cured within thirty (30) days after the County provides written notice to cure, County may, in addition to any other remedy at law or in equity, immediately terminate this Agreement or seek specific performance of this Agreement. In the event that the County defaults under this Agreement, and such default is not cured, City may, in addition to any other remedy at law or in equity, immediately terminate this Agreement or seek specific performance of this Agreement. Breach, and related specific performance, of the City's obligations is limited to circumstances where the City has not made any effort to obtain a right-of-way dedication.

4.05 Cooperation. The Parties agree to cooperate at all times in good faith to effectuate the purposes and intent of this Agreement.

4.06 Entire Agreement. This Agreement contains the entire agreement of the Parties regarding the subject matter hereof and supersedes all prior or contemporaneous understandings or representations, whether oral or written, regarding the subject matter and only relates to the County Project shown on Exhibit "A."

4.07 Amendments. Any amendment of this Agreement must be in writing and will be effective if signed by the authorized representatives of the Parties.

4.08 Applicable Law; Venue. This Agreement will be construed in accordance with Texas law. Venue for any action arising hereunder will be in Williamson County, Texas.

4.09 Notices. Any notices given under this Agreement will be effective if (i) forwarded to a Party by hand-delivery; (ii) transmitted to a Party by confirmed telecopy; or (iii) deposited with the U.S. Postal Service, postage prepaid, certified, to the address of the Party indicated below:

CITY:	City of Leander 201 North Brushy Street Leander, Texas 78641 Attn: City Manager
COUNTY:	710 S. Main Street, Georgetown, Texas 78626 Attn: Bill Gravell, Jr. Telephone: (512) 943-1550 Facsimile: (512) 943-1662

4.10 Counterparts; Effect of Partial Execution. This Agreement may be executed simultaneously in multiple counterparts, each of which will be deemed an original, but all of which will constitute the same instrument.

4.11 Authority. Each Party represents and warrants that it has the full right, power and authority to execute this Agreement.

4.12 Effective Date. This Agreement is executed to be effective on the date the last Party signs this Agreement.

4.13 No Joint Venture. The County Project is a sole project of the County and is not a joint venture or other partnership with the City.

[signature pages follow]

Formatted: Font: Not Bold, Italic

Formatted: Centered

CITY OF LEANDER, TEXAS

By:_____

Name:_____

Its:_____

ATTEST:

By: _____

_____, _____ City Secretary

THE STATE OF TEXAS §
§
COUNTY OF WILLIAMSON §

THIS INSTRUMENT was acknowledged before me on this ____ day of _____, 2023~~2~~, by _____ as Mayor of the City of Leander, a Texas home-rule city, on behalf of said city.

_____
Notary Public, State of Texas

WILLIAMSON COUNTY, TEXAS

By:_____
Bill Gravell, Jr., County Judge

ATTEST:

By: _____
Nancy Rister, County Clerk

THE STATE OF TEXAS §
§
COUNTY OF WILLIAMSON §

THIS INSTRUMENT was acknowledged before me on this ____ day of _____, 2023~~2~~, by Bill Gravell, Jr., County Judge of Williamson County, Texas, on behalf of said County.

_____
Notary Public, State of Texas

AGENDA ITEM # 13

EXECUTIVE SUMMARY
01/19/2023

AGENDA SUBJECT:

Approval of Task Order GBA-007 with George Butler Associates, Inc. for a citywide Wastewater Master Plan study in the amount of $551,936.00; and authorize the City Manager to execute any and all necessary documents.

BACKGROUND:

Listed in our Capital Improvements Program (CIP) under Project ID WW.48, this Study is for the citywide Wastewater Master Plan for updating the next ten (10) years of wastewater needs and projects in the city. The prior Wastewater Master Plan study was conducted in 2017 which requires an update every five (5) years as part of the City's Comprehensive Plan. This study will include existing capacity analysis of all of the City's major public wastewater lines, lift stations, as well as the City's wastewater treatment plants, and recommend future projects to meet the City's wastewater demand.

The study will consist of two (2) phases. Phase 1 will include a study of the City's wastewater collection system and Phase 2 will include the wastewater facilities plan for the wastewater treatment plant at RM 2243.

RECOMMENDATION:

Staff recommends approval of Task Order GBA-007 in the not-to-exceed amount of $551,936.00 with George Butler Associates, Inc. for the professional engineering services for the Wastewater Master Plan update; and authorize the City Manager to negotiate and execute any and all necessary documentation.

PRESENTER:

Emily D. Truman, PE, CFM, PMP, City Engineer

Fiscal Impact

Amount requested:	$551,936
Approved in current budget (Yes / No):	Yes
Expenditure (New / Amended):	New
Recurring or one-time:	One-time
Fund source (Operating / Utility / etc.):	Wastewater Impact Fee 26-01-56

Attachments

1. GBA-007 Task Order
2. GBA-007 Fee Table

JAY ENGINEERING, A DIVISION OF GBA
Texas Engineering Firm #4242

1500 County Road 269
Leander, TX 78641

PO Box 2029
Leander, TX 78646-2029

PROPOSED SCOPE OF WORK, FEE AND STANDARD RATES FOR TASK ORDER NO. GBA-007

January 3, 2023

Ms. Gina Ellison, P.E.
Public Works Director
City of Leander
P.O. Box 319
Leander, TX 78646

Re: City of Leander
Wastewater Collection and Treatment Systems Master Plan Update

Dear Ms. Ellison:

In accordance with our discussions, this proposal being submitted by George Butler Associates, Inc. (ENGINEER) is to define the scope of services and cost for updating the comprehensive master plan for the City of Leander's (CITY) wastewater collection and treatment systems. The existing master plan was developed in 2017 and was intended to project wastewater collection and treatment needs for the CITY for the 20-year period from 2015 to 2035. Growth within the CITY has occurred at a much more rapid rate than previously anticipated, hence the need to update the existing study and projected flows. The projection for ultimate population capacity has nearly doubled since the previous study was performed. Flow monitoring is being performed under a separate study effort across the entirety of the collection system. Results from this plan update will be compared to collection system monitored data to calibrate and confirm existing system capacities.

As an option within this Scope, the RM 2243 Wastewater Treatment Plant (WWTP) Facilities Master Plan (scope and fee previously submitted to Public Works) can be performed concurrently with this Wastewater Collection System Master Plan Update. The WWTP Facilities Master Plan is needed to evaluate the alternative of expanding the WWTP to meet future flows versus the alternative of bypassing a portion of future flows to the Brushy Creek Regional Wastewater System (BCRWWS) for treatment. Performing this evaluation in conjunction with the Wastewater Collection System Master Plan Update will provide necessary coordination between the two for future planning and capital improvements efforts. Due to the large capital costs associated with construction of the ultimate facility at the WWTP site, a phased approach to plant expansion is to be considered to defer portions of treatment expansions until they are required. For these reasons, the CITY has determined the need for a facility plan that addresses all needs associated with treating and conveying future wastewater flows tributary to the Leander WWTP or BCRWWS. The Collection System Master Plan and Facility Plan will address system needs and interim phases, over a 20-year planning period.

Following is the scope of services and fee schedule for the project:

SCOPE OF SERVICES

Phase I – Wastewater Collection System Master Plan

TASK 100 – PRELIMINARY CONFERENCES AND INVESTIGATION

SUBTASK 1: Conduct Kickoff Meetings (2 meetings). Arrange and provide agendas for kickoff meetings with CITY's Engineering and Public Works staff, and others as appropriate for the project. Discussions shall be held to review and confirm the project goals, planning intervals and objectives, to evaluate primary concerns regarding implementation of the project(s), and to review the scope of work, schedule and deliverables. Minutes of the meetings will be generated and submitted to the City for project records.

SUBTASK 2: Conduct Progress and Review Meetings (Up to 4 meetings). Arrange, provide agendas and conduct progress and submittal review meetings with CITY staff. Minutes of the meetings will be generated and submitted to the City for project records.

SUBTASK 3: Administration. Provide project administration by coordinating work with CITY and making assignments to ENGINEER's staff and maintaining schedule. Provide monthly billings to CITY.

TASK 200 – COLLECT AVAILABLE DATA

SUBTASK 1: Define and Establish Wastewater Service Study Area. Work with the CITY to define the study area boundaries and gather documents related to current and future land use and population projections for areas within the service area. Documents utilized in the development of the plan will be the 2020 Comprehensive Plan for land uses, current Water Master Plan for population projections and the 2017 Master Wastewater Plan for status of previously identified CIP projects.

SUBTASK 2: Collect Records. Data will be collected from the CITY that will include but is not limited to previous reports, interlocal and development agreements, record drawings, lift station information, asset registry, GIS data (wastewater system, planning department), mapping, and population data for the project.

SUBTASK 3: Survey Manholes. Manholes that are connected to pipes with diameters of 12 inches or greater will be surveyed to obtain X/Y coordinates and manhole rim elevations. Measurements of depth to invert will also be collected. Only those manholes that are intended to be modeled will be surveyed.

SUBTASK 4: Establish Design Criteria. CITY and ENGINEER will discuss and establish desired design criteria relative to TCEQ Rules for conveyance based on expected flows, modeling, and capacity requirements. If design criteria varies from previous master plans, impacts of design criteria modification will be considered relative to existing data and projections.

SUBTASK 5: Review Data and Interlocal Agreements. Review the collected data and established criteria, identifying any data gaps and noting any necessary assumptions.

ENGINEER will review the following agreements which have direct impacts on CITY's wastewater collections system planning:

Interlocal Agreements to be considered:

- Brushy Creek Regional Wastewater Authority
- City of Liberty Hill
- City of Jonestown

Development Agreements to be considered:

- Travisso
- Bar W Ranch

SUBTASK 6: Data Collection Technical Memorandum. Prepare and submit a technical memorandum documenting the Wastewater Service Study Area, current and future land uses and population projections, collected records and selected design criteria. This technical memorandum will be incorporated into the final report.

TASK 300 – REVIEW STATUS OF EXISTING WASTEWATER MASTER PLAN IMPROVEMENTS

SUBTASK 1: Review proposed infrastructure improvements from City of Leander 2017 Wastewater Master Plan.

SUBTASK 2: Provide general status (pending, under construction, complete) of each proposed infrastructure improvement from the City of Leander 2017 Wastewater Master Plan from Table 6-

1 from the 2017 Master Plan.

TASK 400 – REVIEW EXISTING COLLECTION SYSTEM

SUBTASK 1: Establish Understanding of Existing System. Review and understand current capacities (per City staff knowledge and past studies) and projections of the existing infrastructure focusing on interceptors and lift stations.

SUBTASK 2: Establish Current Flow Characteristics. Review the most recent flow monitoring report to understand the current operational state of the system. Quantified I/I analyses from the study will be considered when performing the review of the existing system.

SUBTASK 3: Develop Network Figures. Based on existing data generated by others for land use projections and establishing flow monitoring basins, figures will be developed that represent the extents of the collection system and operational configurations.

SUBTASK 4: Existing Conditions Technical Memorandum. Prepare and submit a technical memorandum summarizing the status of existing wastewater master plan infrastructure improvements (Task 300), current flow characteristics, and existing conditions of the collection system. This technical memorandum will be incorporated into the final report.

TASK 500 – MODELING

SUBTASK 1: Drainage Basins, Land Uses, Population and Flow Projections. Establish within an ArcGIS platform and utilize planned land uses and population projections to develop flow projections within the Wastewater Service Study Area (established under Task 200) for the 20-year planning horizon. The 5-year, 10-year, and 20-year time horizons will be considered for this plan.

SUBTASK 2: BCRWWS Flow Projections. Develop preliminary wastewater flow projections to be used by the Brushy Creek Regional Wastewater System (BCRWWS) for planning purposes. Estimated wastewater flows to be sent to BCRWWS by CITY will be estimated for the time horizons of this project (5-year, 10-year, and 20-year). ENGINEER will provide CITY with a technical memorandum summarizing the BCRWWS flow projections and the assumptions used to develop these projections. This technical memorandum will be incorporated into the final report.

SUBTASK 3: Network Development. Utilizing the GIS data from the I/I Reduction program, a model network of sewers 12 inch and greater (and City selected 8-inch lines identified during

December 13, 2022 meeting) in the CITY's collection system shall be developed in PCSWMM. The network will also include lift stations within the service area that are connected to modeled lines. Routing, elevation, and missing data checks will be conducted on the initial network. Corrective measures will primarily be conducted in the office and may include checking record drawings for missing data or interpolating missing elevations between known invert data. It is anticipated that some data (for up to 200 locations) will need to be collected in the field and will require rim elevation surveys such as diversions and flow splitters to correct or verify the network. Lift station data will be collected from the CITY's records or from discussions with CITY staff and/ or site visits (up to 38). Any needed changes to the GIS will be documented and communicated to CITY's GIS personnel. Data flags will be included in the Model to flag the source of the data used.

SUBTASK 4: Model Calibration. Model calibration will be conducted by utilizing ENGINEER's existing procedures and existing flow monitoring data. ADDWF will be calculated from diurnal flows, large users and population equivalents. Infiltration will be inserted as a constant flow distributed through the catchments. Inflow will be represented in the model and calibrated to the Q vs. i plot, rain events to which the model is to be verified, and shape of the synthetic hydrograph obtained from summarized data.

SUBTASK 5: Model Calibration Technical Memorandum. Prepare and submit a technical memorandum summarizing the model development methodology and model calibration statistics. This technical memorandum will be incorporated into the final report.

SUBTASK 6: Model Settings Workshop. A model set-up workshop will be conducted with CITY to discuss the existing conditions model and future growth scenarios for the 5, 10, and 20-year study horizon model runs. Model setup will be reviewed and any suggestions or questions from the City will be addressed prior to finalizing model runs.

The levels of growth to include in the model runs will be based on an estimated percent development in identified growth areas. The established level of growth (percent developed) in each growth basin will be for the 5, 10, and 20-year study horizons.

SUBTASK 7: Model Runs. Model runs will be conducted. The CITY's design storm will be used for all model runs. The following model runs will be completed:

- Existing Conditions (Baseline Scenario)

- Interim Future Growth Conditions (5 and 10-year time horizons)
- 20-year Future Growth Conditions

TASK 600 – MODEL RUNS ANALYSIS

SUBTASK 1: Collect Cost Data. Planning-level unit cost data will be utilized to develop opinions of probable cost for relief sewer and pumping improvements. Recent opinions of probable cost and construction bid tab averages will be collected from CITY to assist in this process. The cost data will include planning-level sewer installation or relief sewer costs, lift station costs and force main costs. The cost data will be summarized for the report.

SUBTASK 2: I/I Reduction Recommendations. Model results will be compared to the CITY's most recent I/I and flow monitoring study. The hydraulic capacity of interceptors serving flow monitoring basins with heavy I/I will be reviewed. General recommendations for which basins to prioritize for I/I reduction efforts will be developed.

SUBTASK 3: Summarize Model Runs. For each model run, overloaded sewers will be established with a percent used. Any overloaded sewers and areas of concern will be identified and mapped to assist in alternatives development.

SUBTASK 4: Establish Urgency of Relief Sewers. The model runs will assist in determining the urgency of relief sewers for interceptors. Based on the results, a recommended timeline of improvements will be developed and presented in the alternative workshop meeting as described below. Trigger points for actual project implementation will also be identified for critical CIP projects.

SUBTASK 5: Model Run Analysis Technical Memorandum. Prepare and submit a technical memorandum summarizing the model run results and analysis for each modeled scenario. This technical memorandum will be incorporated into the final report.

TASK 700 – ALTERNATIVE EVALUATION FOR RELIEF OF INTERCEPTORS

SUBTASK 1: Alternative Development Workshop. The alternative relief options for interceptors will be developed under 20-year growth conditions. Once all alternatives' options have been developed, a meeting with CITY will then be held to narrow the alternatives to no more than three. Possible alternatives include pipe bursting, parallel interceptor, replacement interceptor and storage.

An opinion of probable cost for relief sewers will be established for each run. Relief sewers and relief sewer costs will be based on replacement sewers to carry the flow with no surcharge. City-preferred priority for line replacement alternatives is first pipe bursting, then line removal/replacement and then parallel mains. Recommendations for replacement methodologies will be provided.

SUBTASK 2: Alternative Model Runs. The alternative relief options will be set up in the model and run for 20-year growth conditions during the CITY's design storm. Relief sizing will be determined to safely transport the flow.

SUBTASK 3: Opinions of Probable Cost for Alternatives. Following model runs of improvement alternatives, planning level opinions of probable cost for the alternatives will then be established. A comparison of the alternatives will then be conducted to establish pros and cons for each.

SUBTASK 4: Meeting with CITY to Select Alternative. A meeting with the CITY be held to review the alternatives and select an alternative for the recommended plan.

SUBTASK 5: Conceptual Plan for Northwest of City. A conceptual plan for providing sanitary sewer service to areas northwest of the City will be developed. The plan will provide conceptual interceptor and force main alignments and lift station locations. Planning-level opinions of probable cost of the recommended alternative will be provided.

SUBTASK 6: Alternatives Evaluation Technical Memorandum. Prepare and submit a technical memorandum summarizing the modeled alternatives, planning-level opinions of probable cost, and selected alternatives. The conceptual plan for providing sanitary sewer service to areas northwest of the City will also be included. This technical memorandum will be incorporated into the final report.

TASK 800 – REPORTING

SUBTASK 1: Summarize Work Completed. The work completed will be summarized into report form. All technical memorandums developed as part of the project will be incorporated into the final report document.

SUBTASK 2: Develop Recommendations and Conclusions. The recommendations for improvements to the collection system including new facilities, interceptors' capacity, I/I removal and further evaluation of overloaded sewers will be developed. Included with the recommendations will be planning-level opinions of probable cost. Recommendations for future

updates and maintenance of the master plan document and model will be provided.

SUBTASK 3: Phasing Plan. A phasing plan will be developed. Projects will be prioritized based on the size of the project and costs. Review of model runs for existing conditions, interim growth and 20-year growth will also assist in establishing project phases.

SUBTASK 4: Prepare Draft Report. A draft report will be prepared that summarizes and presents results. The report will be submitted to CITY and a review meeting will be scheduled to discuss comments.

SUBTASK 5: Prepare Final Report. A final report will address any comments from the draft report review meeting. A final submittal will include a hard copy and digital version of the final report.

SUBTASK 6: Data Submittal and Modeling Software. The following submittals will be provided at the end of the project:

- PCSWMM Licenses (3). City will purchase three licenses directly from Computational Hydraulics International (CHI) due to software licensing requirements. (https://www.pcswmm.com/Pricing)
- PCSWMM Model:
    - Existing System Set-up (Calibrated Model)
    - 5-year, 10-year, and 20-year Growth Set-up
    - Final Alternative Set-up
- Inventory data and key model results fields in a format that can be imported into a GIS database. (To be coordinated with Leander GIS Staff).

Phase II – RM 2243 Wastewater Treatment Plant Facilities Master Plan

TASK 100 – PRELIMINARY CONFERENCES AND INVESTIGATION

SUBTASK 1: Conduct Kickoff Meetings (2 meetings). Arrange and provide agendas for kickoff meetings with CITY's Engineering and Public Works staff, and others as appropriate for the project. Discussions shall be held to review and confirm the project goals, planning intervals and objectives, to evaluate primary concerns regarding implementation of the project(s), and to confirm the scope of work, schedule and deliverables. Minutes of the meetings will be generated and submitted to the City for project records.

SUBTASK 2: Conduct Progress and Review Meetings (4 meetings). Conduct progress and submittal review meetings with CITY staff. Minutes of the meetings will be generated and submitted to the City for project records.

SUBTASK 3: Administration. Provide project administration by coordinating work with CITY and making assignments to ENGINEER's staff and maintaining schedule. Provide monthly billings to CITY accompanied by schedule of completion and description of work completed associated with the billing.

TASK 200 – COLLECT AVAILABLE DATA

ENGINEER will collect available data as necessary to perform evaluations and develop Facility plan including, but not limited to the following:

SUBTASK 1: Gather Planning Documents. Work with the CITY to gather documents related to current and future land use and population projections for areas in the service area.

SUBTASK 2: Gather Historical Documents. Work with the CITY to gather documents pertinent to the Wastewater Treatment Plant including historical TCEQ reporting (influent, effluent, process, etc.), as-built plans, asset registry, GIS data (wastewater system, planning department) work orders, historical facilities planning documents, etc.

SUBTASK 3: Gather Latest GIS Information. The CITY maintains a GIS of the sewer system. Collect the most recent GIS data files from the CITY's GIS to be used for confirming the service area.

SUBTASK 4: Confirm Regulatory Requirements. Coordinate and attend a meeting with the CITY and TCEQ to discuss new discharge limits and potential future limits. Prepare notes to document

the discussed items and distribute to the attendees.

TASK 300 – COLLECT FIELD DATA FOR DIGITAL IMAGERY, FACILITY MAPPING AND GIS DATASET

ENGINEER will employ the use of Advance Robotic and Remote Sensing (ARRS) to collect digital imagery for facility mapping and GIS dataset information including:

SUBTASK 1: Digital imagery of all above-ground facilities.

SUBTASK 2: Digitize 3-D models of all above-ground facilities

SUBTASK 3: Compile GIS data on facilities including date of installation, size, material, of process chambers, lines, manholes, junction boxes and major treatment equipment.

SUBTASK 4: Coordinate identifiers for all components.

SUBTASK 5: Conduct up to three (3) field investigations to confirm facilities.

SUBTASK 6: Coordinate potholing (by others) of up to twenty (20) sites within the facility to confirm facility locations.

SUBTASK 7: Generate Facility Map for retention by City of Leander

TASK 400 – EVALUATE ONGOING IMPACT FEE UPDATE INFORMATION

ENGINEER is aware that the City is currently engaged in performing a Water Master Plan update that defines service area, growth estimates, future land uses, and projects population and water utility demands for the planning period.

SUBTASK 1: Attend a meeting with the CITY to discuss growth and the service area limits. The discussions will review the results of the ongoing Study.

SUBTASK 2: Review exhibits showing the existing and future service area boundaries.

SUBTASK 3: Review existing and future service area boundary maps.

SUBTASK 4: Review projections of population growth and land uses for the 20-year planning period.

TASK 500 – REVIEW EXISTING WWTP CONDITIONS

ENGINEER will perform a process, capacity and emergency needs analysis of the existing Leander WWTP for current conditions to determine the following:

SUBTASK 1: Identify treatment deficiencies (assuming existing flows) using a desktop analysis of the treatment process components based on gathered information and standard industry design values.

SUBTASK 2: Identify hydraulic restrictions (assuming existing flows) using a desktop analysis of the treatment process components based on gathered information and standard industry design values.

SUBTASK 3: Compare process and capacity analysis with existing rated capacities and existing system performance.

SUBTASK 4: Review existing emergency power resources and ability of the WWTP to continue functioning during power outages or extreme weather conditions. Identify deficiencies and need for the installation of emergency power sources.

SUBTASK 5: Meet with plant staff to solicit input on existing capacity performance, existing process performance, and any deficiencies in the plant operation.

TASK 600 – REVIEW PROJECTED WASTEWATER FLOWS AND LOADS

SUBTASK 1: ENGINEER will establish flow and load projections based on existing wastewater characteristics, land use and population projections. Flow characteristics will include design average flow, design max daily flow, design peak hourly flow and design peak instantaneous flow. Load parameters will include CBOD, TSS, N & P. Establish existing per capita flow and load values, as well as diurnal and seasonal peaking factors.

SUBTASK 2: Define design flows and loadings.

TASK 700 – PREPARE AND EVALUATE TREATMENT ALTERNATIVES

ENGINEER will prepare and evaluate concepts for alternative treatment processes, improvements, and upgrades to meet the projected flows, loads, and regulatory requirements. Analyze process requirements and upgrades for the following processes:

- Screening and grit removal
- Liquid stream treatment
- Effluent disinfection/dechlorination
- Solids management

These alternatives will be compared to the original alternative of pumping future flows to the

BCRWWS for treatment including user charge rates. ENGINEER will perform the following scope of services:

SUBTASK 1: Analyze process requirements and upgrades to address the following:

a. Potential modifications to increase efficiency, improve reliability, and address treatment deficiencies identified.

b. Evaluate opportunities to maximize capacity of existing facilities with optimum capital investment.

SUBTASK 2: Define and develop alternatives as follows:

a. Evaluate alternatives for improvements to the existing facility, specifically for the following:
   (1) Screening and grit removal
   (2) Treatment systems expansion for future growth
   (3) Disinfection/Dechlorination
   (4) Solids management
b. Address the following non-cost evaluation criteria for each alternative:
   (1) Reliability and operational constraints
   (2) Regulatory, legal, and institutional requirements.
c. Develop opinions of probable planning level capital costs (OPCC).
d. Develop annual operational and maintenance costs.
e. Develop an implementation plan and present worth costs for each alternative.

SUBTASK 3: Meet with CITY to discuss the following:

a. Review the alternatives analyzed
b. Obtain the CITY's comments and concerns
c. Discuss the preferred alternatives
d. Prepare meeting minutes and distribute for review and comment

TASK 800 – FACILITY PLAN

ENGINEER will prepare a Facility Plan incorporating the evaluations completed in Tasks 200 through 700. Based upon the preferred alternative, the Facility Plan will include the following information for the selected alternative:

- A process diagram with unit process criteria

- A hydraulic grade line model
- A proposed/updated site layout
- Preliminary details of significant improvements to process units and structures
- A preliminary Process and Instrumentation Diagram
- Phasing schedule for 20-year planning period

The Facility Plan will be prepared in accordance with TCEQ Chapter 217 Rules.

SUBTASK 1: Preliminary Facility Plan

a. ENGINEER will prepare a preliminary Facility Plan including:

   (1) The evaluation of the improvement options that remedy the treatment facility deficiencies, regulatory requirements, and future growth.

   (2) A recommended alternative based on the evaluations.

   (3) Addressing I/I concerns based on the CITY's ongoing I/I evaluations.

   (4) An OPCC and preliminary concept layout for each recommended alternative that includes construction type work.

   (5) An allowance for contingency, engineering fees and administrative efforts, including coordination with TCEQ if necessary, will be added to the OPCC. Cost data will be based on information collected from the CITY, as well as ENGINEER's past projects.

b. Include in the Facility Plan the following components:

   (1) Executive Summary

   (2) Introduction, Purpose, and Need

   (3) Summarize Understanding of Study Area Characteristics Identified in K. Friese and Associates Report

   (4) Existing Wastewater Facilities

      (a) Wastewater Conveyance System

      (b) Wastewater Treatment Plant

   (5) Wastewater Characteristics

      (a) Wastewater Volume

      (b) Wastewater Composition

      (c) Projected Wastewater Characteristics

(6) Basis of Planning

(a) Basis for Design

(b) Basis for Opinions of Probable Cost

(c) Design Capacity of Existing Wastewater Treatment Plant

(7) Development and Evaluation of Alternatives

(a) Screening and Grit Alternatives

(b) Wastewater Treatment Plant Liquid Stream Treatment Alternatives

(c) Disinfection/Dechlorination Alternatives

(d) Biosolids Management

(e) Development, Evaluation, and Comparison of Alternatives to the Original Option

(f) Recommendations for emergency power implementation, if needed

c. ENGINEER will submit the preliminary Facility Plan to the CITY for review and comment. ENGINEER will meet with CITY to discuss the preliminary Facility Plan and obtain the CITY's comments.

SUBTASK 2: Final Facility Plan

a. ENGINEER will incorporate CITY's comments into final Facility Plan and submit to CITY for approval.

FEE SCHEDULE

Task No.	**Task Description**	**Fee**
Phase I – Wastewater Collection System Master Plan		
100	Preliminary Conferences and Investigation	$35,960
200	Collect Available Data	$76,681
300	Review Status of Existing Wastewater Master Plan Infrastructure Elements	$10,290
400	Review Existing Collection System	$12,480
500	Modeling	$152,680
600	Model Runs Analysis and Resulting Costs	$22,260
700	Alternative Evaluation for Relief of Interceptors	$29,740
800	Reporting	$29,740
	Sub-Total	*$369,831*

Phase II – RM2243 Wastewater Treatment Plant Facilities Master Plan		
100	Administration	$13,130
200	Collect Available Data	$8,980
300	Collect Field Data for Digital Imagery, Facility Mapping and GIS Dataset	$60,575
400	Evaluation Ongoing Impact Fee Update	$8,335
500	Review Existing WWTP Conditions	$22,970
600	Develop Projected Wastewater Flow and Organic Loads	$5,115
700	Prepare and Evaluate Treatment Alternatives	$31,500
800	Facility Plan	$31,500
	Sub-Total	*$182,105*
	TOTAL	***$551,936***

ADDITIONAL SERVICES

Services specifically excluded under this Agreement include:

1. Any designs or reports not specifically listed.
2. Additional meetings and site visits not specifically listed.
3. Any other service not specifically listed.

Should the City act to accept this proposed professional services agreement at the scope, terms and price offered, please execute the attached Task Order and provide a copy to this office.

Sincerely,

Frank T. Phelan

Frank Phelan, P.E.

FTP/s
Attachments

TASK ORDER FOR PROFESSIONAL SERVICES
TASK ORDER NO. GBA-007

This will constitute authorization by the City of Leander, Texas (Owner), for George Butler Associates, Inc., (Engineer) to proceed with the following described engineering services.

PROFESSIONAL SERVICES FOR
WASTEWATER COLLECTION AND TREATMENT SYSTEMS MASTER PLAN UPDATE

A. PROJECT DESCRIPTION

The City of Leander has requested George Butler Associates, Inc, Inc. perform professional services described in the attached Proposal dated January 3, 2023.

B. SCOPE OF SERVICES

George Butler Associates, Inc. will perform the services as described in the Scope of Services section of the attached Proposal, dated January 3, 2023.

C. DELIVERABLES

George Butler Associates, Inc. will provide deliverables as described in the Scope of Services Section of the attached Proposal dated January 3, 2023.

D. BASIS OF COMPENSATION

Compensation shall be $551,936. The City shall make payments to the Engineer on a monthly billing basis in accordance with the attached Proposal dated January 3, 2023.

TIME FOR COMPLETION
The Engineer will work expeditiously to complete the services in the shortest length of time possible, not exceeding 12 months, unless otherwise agreed.

APPROVED:	ACCEPTED:
CITY OF LEANDER, TEXAS	GEORGE BUTLER ASSOCIATES, INC.
By: _____	By: Frank T. Phelan
Title: City Manager	Title: Senior Associate
Attest: _____	Attest: Zachary Sperry, PE
Date: 01.19.2023	Date January 3, 2023

WORK TASKS		PERSONNEL CLASSIFICATION														
		PRI	SA	ASSOC	SE	SE - ME	PROJ E	DGN E	S TECH	P TECH	SURVEY	ADMIN	Mileage	Software	TOTAL	TOTAL
		$280	$245	$220	$180	$180	$160	$140	$155	$125	$210	$95	$0.63	$1,600	HOURS	COST
Task 100 - Preliminary Conferences and Investigation																
1	Conduct Kickoff Meetings	2			8										10	$2,000
2	Conduct Progress and Review Meetings	6	12		24		24	24							90	$16,140
3	Administration		8	8	72							12			100	$17,820
Task 100 Subtotal		8	20	8	104	0	24	24	0	0	0	12			200	$35,960
Task 200 - Collect Available Data																
1	Define and Establish Wastewater Service Study Area		1		1		2		16						20	$3,225
2	Collect Records		1		4		4	8							17	$2,725
3	Survey Manholes (981+/- manholes at 3.75/Hr.)						8				262		825		270	$56,816
4	Establish Design Criteria		1		1		2								4	$745
5	Review Data and Interlocal Agreements		2		16		12	8							38	$6,410
6	Data Collection Technical Memorandum		8		8			24							40	$6,760
Task 200 Subtotal		0	13	0	30	0	28	40	16	0	262	0			389	$76,681
Task 300 - Review Status of Existing Wastewater Master Plan Improvements																
1	Review Proposed Improvements from 2017 Master Plan		1		5		25								31	$5,145
2	Provide General Status of Proposed Improvements from 2017 Master Plan		1		5		25								31	$5,145
Task 300 Subtotal		0	2	0	10	0	50	0	0	0	0	0			62	$10,290
Task 400 - Review Existing Collection System																
1	Establish Understanding of Existing System		2		2		4								8	$1,490
2	Establish Current Flow Characteristics		1		1		2		8						12	$1,985
3	Develop Network Figures		1		1		2		8						12	$1,985
4	Existing Conditions Technical Memorandum		4		8			24	8						44	$7,020
Task 400 Subtotal		0	8	0	12	0	8	24	24	0	0	0			76	$12,480
Task 500 - Modeling																
1	Drainage Basins, Land Uses, Population and Flow Projections		2		16		32	32							82	$12,970
2	BCRWWS Flow Projections		4		8			24	8						44	$7,020
3	Network Development		4		30		66	64	80	210					454	$64,550
4	Model Calibration	6	2				60	240							308	$45,370
5	Model Calibration Technical Memorandum		4		8		8	24	8						52	$8,300
6	Model Settings Workshop	2	2				2	6							12	$2,210
7	Model Runs		4		4		24	48							80	$12,260
Task 500 Subtotal		8	22	0	66	0	192	438	96	210	0	0			1032	$152,680
Task 600 - Model Runs Analysis																
1	Collect Cost Data		2				16	16							34	$5,290
2	I/I Reduction Recommendations		2				8	8							18	$2,890
3	Summarize Model Runs		2				16	16							34	$5,290
4	Establish Urgency of Relief Sewers		2				8								10	$1,770
5	Model Run Analysis Technical Memorandum		4		8			24	8						44	$7,020
Task 600 Subtotal		0	12	0	8	0	48	64	8	0	0	0			140	$22,260
Task 700 - Alternative Evaluation for Relief of Interceptors																
1	Alternative Development Workshop		2		4		4	16	12						38	$5,950
2	Alternative Model Runs		2		4		8	12							26	$4,170
3	Opinions of Probable Cost for Alternatives		2		4		6								12	$2,170
4	Meeting with City to Select Alternative		2		4		6								12	$2,170
5	Conceptual Plan for Northwest of City		4		8			24	16						52	$8,260
6	Alternatives Evaluation Technical Memorandum		4		8			24	8						44	$7,020
Task 700 Subtotal		0	16	0	32	0	24	76	36	0	0	0			184	$29,740
Task 800 - Reporting																
1	Summarize Work Completed				8			16							24	$3,680
2	Develop Recommendations and Conclusions	2	4		8			8							22	$4,100
3	Phasing Plan	2	2		8			8							20	$3,610
4	Prepare Draft Report	2	4		8			16							30	$5,220
5	Prepare Final Report	2	2		4			16							24	$4,010
6	Data Submittal and Modeling Software (3 Licenses)				4			8	16					3	28	$9,120
Task 800 Subtotal		8	12	0	40	0	0	72	16	0	0	0			148	$29,740
SUBTOTAL for PHASE I		*24*	*105*	*8*	*302*	*0*	*374*	*738*	*196*	*210*	*262*	*12*			*2231*	*$369,831*

WORK TASKS		PERSONNEL CLASSIFICATION														
		PRI	SA	ASSOC	SE	SE - ME	PROJ E	DGN E	S TECH	P TECH	SURVEY	ADMIN	Mileage	Software	TOTAL	TOTAL
		$280	$245	$220	$180	$180	$160	$140	$155	$125	$210	$95	$0.63	$1,600	HOURS	COST
Task 100 - Preliminary Conferences and Investigation																
1	Conduct Kickoff Meetings (2 meetings)	2	2		2							2			8	$1,600
2	Conduct Progress and Review Meetings (4 meetings)	2	2		8		4					4			20	$3,510
3	Administration	4	2		20		14					6			46	$8,020
Task 100 Subtotal		8	6	0	30	0	18	0	0	0	0	12			74	$13,130
Task 200 - Collect Available Data																
1	Gather Planning Documents		1		4		4								9	$1,605
2	Gather Historical Documents		1		4		4								9	$1,605
3	Gather Latest GIS Information				2		2		4						8	$1,300
4	Confirm Regulatory Requirements		6		6		12								24	$4,470
Task 200 Subtotal		0	8	0	16	0	22	0	4	0	0	0			50	$8,980
Task 300 - Collect Field Data for Digital Imagery, Facility Mapping and GIS Dataset																
1	Collect Aerial Imagery with ARRS		1		30										31	$5,645
2	Digitize 3-D Model of All Above Ground Facilities		1		30										31	$5,645
3	Compile GIS data on facilities including date of installation, size, material, etc		1		4		16		140						161	$25,225
4	Coordinate identifiers for all components		1		4										5	$965
5	Conduct up to 3 field investigations to confirm facilities		1		4				40						45	$7,165
6	Coordinate potholing (by others) of up to 20 sites within facility		1		4				20						25	$4,065
7	Generate facility map for retention by City of Leander		1		4		10		60						75	$11,865
Task 300 Subtotal		0	7	0	80	0	26	0	260	0	0	0			373	$60,575
Task 400 - Evaluate Ongoing Impact Fee Update Information																
1	Meet with City to Discuss Growth and Service Area Limits		2		2		4								8	$1,490
2	Review Exhibits of Existing and Future Service Areas		1		1		2		2						6	$1,055
3	Review Existing and Future Service Area Maps		1		1		2		2						6	$1,055
4	Review Pop. Projections for 20-yr Planning Period and Ultimate Buildout		1		4		10		14						29	$4,735
Task 400 Subtotal		0	5	0	8	0	18	0	18	0	0	0			49	$8,335
Task 500 - Review Existing WWTP Conditions																
1	Identify Treatment Process Deficiencies		2		4	16	16		12						50	$8,510
2	Identify Treatment Hydraulic Restrictions		2		4		4	16	12						38	$5,950
3	Compare WWTP Analysis to Exist. Rated Capacities/Performance		2		4		8	12							26	$4,170
4	Review Existing Emergency Power Resources		2		4		6								12	$2,170
5	Meet with Staff to Discuss Plant Performance and Deficiencies		2		4		6								12	$2,170
Task 500 Subtotal		0	10	0	20	16	40	28	24	0	0	0			138	$22,970
Task 600 - Develop Projected Wastewater Flow and Loads																
1	Establish Existing Flows and Organic Loads	1	1		4		4	4	4						18	$3,065
2	Define Design Flows and Organic Loads		2		2		4	4							12	$2,050
Task 600 Subtotal		1	3	0	6	0	8	8	4	0	0	0			30	$5,115
Task 700 - Prepare and Evaluate Treatment Alternatives																
1	Analyze Process Requirements and Upgrades		2		6		12								20	$3,490
2	Define and Develop Alternatives	1	12		16	16	40	28	24	20					157	$25,520
3	Meet with City to Discuss Alternatives		2		4		8								14	$2,490
Task 700 Subtotal		1	16	0	26	16	60	28	24	20	0	0			191	$31,500
Task 800 - Facility Plan																
1	Prepare Preliminary Facility Plan and Submit to City for Comment	2	6		40		40	24	24						136	$22,710
2	Prepare Final Facility Plan and Submit to Leander for Approval	1	2		8		12	20	12						55	$8,790
Task 800 Subtotal		3	8	0	48	0	52	44	36	0	0	0			191	$31,500
SUBTOTAL for PHASE II		*13*	*63*	*0*	*234*	*32*	*244*	*108*	*370*	*20*	*0*	*12*			*1096*	*$182,105*
TOTAL for PHASES I & II		**37**	**168**	**8**	**536**	**32**	**618**	**846**	**566**	**230**	**262**	**24**			**3327**	**$ 551,936**

AGENDA ITEM # 14

EXECUTIVE SUMMARY
01/19/2023

AGENDA SUBJECT:

Approval of extension of the application expiration for Subdivision Case 21-FP-006 Rosenbusch Ph 3 Final Plat; more particularly described by Williamson Central Appraisal District Parcel R599344; generally located to the east of the intersection of Vista Ridge Drive and Lakeline Boulevard; Leander, Williamson County, Texas.

BACKGROUND:

This request is for an extension of the expiration date of the Rosenbusch Ph 3 Final Plat form final plat application. Article II, Section 24 (g) includes the following provisions.

g. **Application Expiration**.

1. The Final Plat application shall expire nine (9) months after the date that all initial staff review comments from all reviewing departments have been issued on the application if the final plat is not approved due to the applicant's failure to cause the application to comply with applicable city regulations.
2. The Planning Department may grant one (1) six (6)- month extension if the applicant can show substantial progress in obtaining approval of the final plat. Substantial progress shall consist of, at a minimum, a resubmission of the final plat and all relevant materials by the applicant that address all initial staff review comments from all reviewing departments.

HISTORY/TIMELINE:

07/20/2020 - Preliminary Plat Approved
01/09/2022 - Final Plat Application Expired
07/09/2022 - Final Plat Application Staff Extension Expired
11/03/2022 - Final Plat Council Extension Approved until January 9, 2023

APPLICANT/AGENT:

Faris Abboushi, LDC

RECOMMENDATION:

The Subdivision Ordinance includes timelines for application approvals. The timeline/history section of this summary above includes the key dates for this request. The final plat application expires nine (9) months after the first review comment letter for the final plat is sent to the applicant.

Staff recommends approval of an additional six (6)- month extension. Approving this extension would grant an extension to July 9, 2023 and will allow the developer to finalize the plat requirements and schedule the plat for review by the Planning & Zoning Commission.

PRESENTER:

Robin M. Griffin, AICP, Executive Director of Development Services

---

Attachments

1. Extension Request Letter

2. Location Exhibit
3. Ordinance

HRGreen

December 21, 2022

Robin M. Griffin, AICP
Planning Director
City of Leander
512-528-2763

RE: **Application Extension Request**
Rosenbusch Ranch Phase 3 Final Plat (21-FP-006)

Dear Ms. Griffin

Please accept this letter as HR Green's formal request for an Application Extension for the Rosenbusch Ranch Phase 3 Final Plat application (City of Leander Case Number: 21-FP-006), which expires on 1/9/2023.

The original application was administratively extended from 1/9/2022 to 7/9/2022, and extended for a second time at City Council from 7/9/2022 to 1/9/2023. We are seeking a third extension of the application to allow for the Final Submittals to occur now that we have cleared all technical comments. The only outstanding item for these applications is the payment of fees.

This extension would allow the applicant additional time needed to secure their approvals for fiscal postings, which have been delayed due to a national changes in fiscal policy driven by current economic market conditions. A hard copy of this letter, along with the required $200 payment, will be submitted to the City of Leander offices shortly.

We appreciate your assistance in this matter and are available to provide any additional information needed from our office at this time.

Sincerely,

Faris Abboushi, PE
HR Green
TBPE Firm #16384

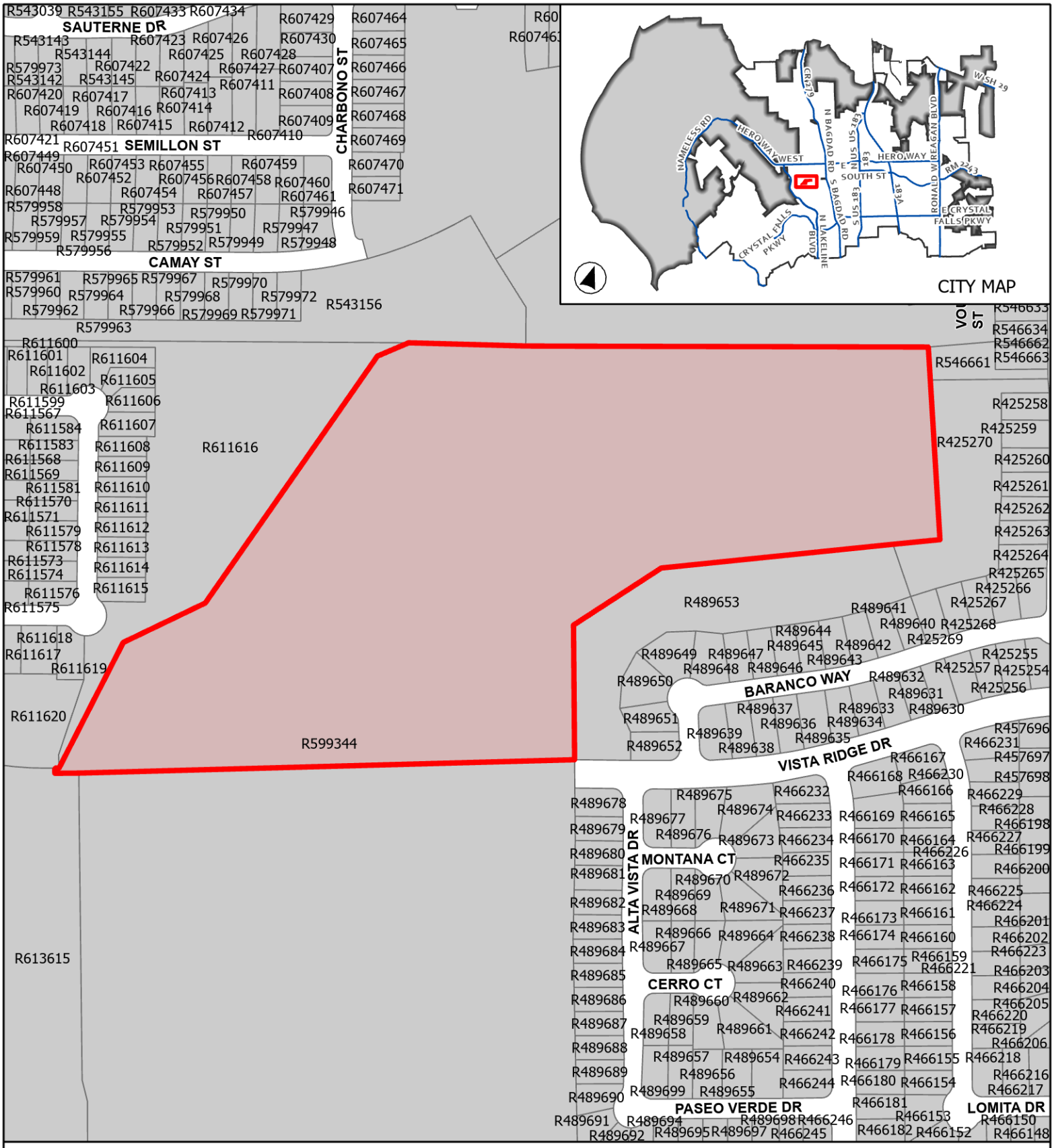

CASE: 21-FP-006 **ATTACHMENT 1** **ROSENBUSCH PH 3**

Location Map

This map has been produced by the City of Leander for informational purposes only. No warranty is made by the City regarding completeness or accuracy. This data should not be construed as a legal description or survey instrument. No responsibility is assumed for damages or other liabilities due to the accuracy, availability, completeness, use or misuse of the information herin provided.

0 150 300

Feet

Leander City Limits

ETJ

Site Location

AN ORDINANCE OF THE CITY OF LEANDER, TEXAS

ORDINANCE NO.

AN ORDINANCE OF THE CITY OF LEANDER, TEXAS GRANTING AN EXTENSION OF THE EXPIRATION OF THE FINAL PLAT APPLICATION FOR THE ROSENBUSCH RANCH PHASE 3 SUBDIVISION.

WHEREAS, Section 24 (g) (1) of the City's Subdivision Ordinance provides that the final plat application expires nine (9) months after the date that all initial staff review comments from all reviewing departments have been issued on the application if the final plat are not approved due to the applicant's failure to cause the application to comply with applicable city regulations;

WHEREAS, Section 24 (g) (2) of the City's Subdivision Ordinance provides that the Planning Department may grant one six (6) month extension if the applicant can show substantial progress in obtaining approval of the final plat;

WHEREAS, the Planning Department granted one six (6) month extension for the Rosenbusch Ranch Phase 3 final plat application (the "Final Plat Application") which expires on or about July 9, 2022;

WHEREAS, the City Council granted one six (6) month extension for the Rosenbusch Ranch Phase 3 final plat application (the "Final Plat Application") which expires on or about January 9, 2023;

WHEREAS, the City Council of the City of Leander, Texas (the "City") finds that there is good reason to grant an extension of the expiration date for the Final Plat Application because the applicant is actively working to address the final plat comments and move forward with final plat within a reasonable timeframe;

NOW, THEREFORE, BE IT ORDAINED BY THE CITY COUNCIL OF THE CITY OF LEANDER, TEXAS THAT:

SECTION 1. Findings of Fact. The forgoing recitals are incorporated into this Ordinance as true and correct findings of fact.

SECTION 2. Extension Granted. The City hereby grants an extension of the expiration date for the Final Plat Application to July 9, 2023. In the event that the Final Plat Application is not approved by the Planning and Zoning Commission on or before July 9, 2023, the Final Plat Application shall expire.

SECTION 3. Effective Date. This Ordinance shall take effect immediately from and after its passage in accordance with the City Charter.

SECTION 4. <u>Open Meetings</u>. It is hereby officially found and determined that the meeting at which this Ordinance was considered was open to the public as required and that public notice of the time, place and purpose of said meeting was given as required by the Open Meetings Act, Chapter 551 of the Texas Government Code.

PASSED AND APPROVED on this the 19th day of January, 2022.

ATTEST:	**THE CITY OF LEANDER, TEXAS**
_____	_____
Dara Crabtree, City Secretary	Christine DeLisle, Mayor

AGENDA ITEM # 15

EXECUTIVE SUMMARY
01/19/2023

AGENDA SUBJECT:

Approval of Second Reading of an Ordinance regarding the B Twisted Annexation Case 22-A-005 regarding the voluntary annexation of 12.40 acres ± in size, more particularly described by Williamson Central Appraisal District Parcel R605507; and generally located approximately 3,000 feet to the west of intersection of Bagdad Road and CR 281, on the south side of CR 281, Leander, Williamson County, Texas.

BACKGROUND:

A resolution was adopted on December 15, 2022 and commenced the voluntary annexation of 12.40 acres ± as described above. The resolution sets the public hearing for January 5, 2023 and the readings of the ordinance for January 5, 2023 and January 19, 2023. This property is subject to a development agreement between the property owner and the City that requires annexation when the land use redevelops and is no longer used for agricultural purposes.

This resolution was originally approved in October, due to a notification error a new resolution and schedule are required.

HISTORY/TIMELINE:

12/15/2022 - City Council Resolution
01/05/2023 - 1st Public Hearing & 1st Reading of the Ordinance

APPLICANT/AGENT:

B Twisted

RECOMMENDATION:

The City Council approved he request during the January 5, 2023 meeting.

PRESENTER:

Robin M. Griffin, AICP, Executive Director of Development Services

---

Attachments

1. Petition
2. Services Agreement
3. Location Map
4. Schedule
5. Resolution
6. Ordinance

STATE OF TEXAS §
§
COUNTY OF WILLIAMSON §

REQUEST & PETITION TO THE CITY COUNCIL OF THE CITY OF LEANDER FOR ANNEXATION OF PROPERTY

WHEREAS, the undersigned is the owner of a certain area of land located within Williamson County, Texas, such property being more particularly described hereinafter by true and correct legal description (referred to herein as the "subject property");

WHEREAS, the undersigned has sought the annexation of the subject property by the City of Leander, Texas, (hereinafter sometimes referred to as "City"), in order to obtain the benefits of City services to the subject property by the City;

WHEREAS, the subject property is contiguous and adjacent to the corporate limits of the City;

WHEREAS, the City, pursuant to *§43.003, Tex. Loc. Gov't. Code* and the request of the property owner, is authorized to annex the subject property;

WHEREAS, pursuant to *§43.0672, Tex. Loc. Gov't. Code*, the City and the undersigned have negotiated and entered into a written agreement for the provision of services to the subject property, said agreement being attached hereto as **Exhibit "B"** and is incorporated herein for all purposes; and,

WHEREAS, the undersigned agrees and consents to the annexation of the subject property by the City and further agrees to be bound by all acts, ordinances, and all other legal action now in force and effect within the corporate limits of the City and all those which may be hereafter adopted.

NOW THEREFORE, the undersigned by this Petition and Request:

SECTION ONE: Requests the City Council of the City to commence annexation proceedings and to annex into the corporate limits of the City of Leander, Texas, of all portions of the subject property, including the abutting streets, roadways, and rights-of-way, not previously annexed into the City, and further described as follows:

> All that certain area of land being 12.402 acres, more or less, in Williamson County, Texas, being more particularly described in **Exhibit A** attached hereto and incorporated herein for all purposes.

SECTION TWO: Requests that after annexation the City provide such services as are legally permissible and provided by the City, including sanitation, water and general governmental services as set forth in the written agreement regarding the provision of services attached hereto as **Exhibit "B"**.

SECTION THREE: Acknowledges executing and entering into the agreement, attached hereto as **Exhibit "B"**, and that such agreement is wholly adequate and acceptable to the undersigned who hereby requests the City Council to proceed with the annexation and to publish notice and hold the requisite public hearing thereon, in accordance with the applicable laws of the State of Texas.

SECTION FOUR: Acknowledges that the undersigned understands and agrees that all City services to the subject property will be provided by the City on the same terms and conditions as provided to other similarly situated areas of the City and as provided in the written agreement regarding the provision of services attached hereto as **Exhibit "B"**.

SECTION FIVE: Agrees that a copy of this Request and Petition may be filed of record in the offices of the City of Leander and in the real property records of Williamson County, Texas, and shall be notice to and binding upon all persons or entities now or hereafter having any interest in the subject property.

FILED, this ___ day of _____ 20___, with the City Secretary of the City of Leander, Williamson and Travis Counties, Texas.

Petitioners:

By: _____
Name: _____
Title: _____

By: _____
Name: _____
Title: _____

STATE OF TEXAS §
§
COUNTY OF _____ §

BEFORE ME, the undersigned authority, a Notary Public in and for said County and State, on this day personally appeared _____, owner of the subject property and Petitioner herein, known to me to be the person whose name is subscribed to the foregoing instrument, and acknowledged that they had authority to bind the entity and that they executed the same for the purposes therein expressed and in the capacity therein stated.

GIVEN UNDER MY HAND AND SEAL OF OFFICE on this the __day of _____ 20___.

(SEAL)

_____
Notary Public - State of Texas

STATE OF TEXAS §
§
COUNTY OF _____ §

BEFORE ME, the undersigned authority, a Notary Public in and for said County and State, on this day personally appeared _____, owner of the subject property and Petitioner herein, known to me to be the person whose name is subscribed to the foregoing instrument, and acknowledged that they had authority to bind the entity and that they executed the same for the purposes therein expressed and in the capacity therein stated.

GIVEN UNDER MY HAND AND SEAL OF OFFICE on this the __day of _____ 20___.

(SEAL)

_____
Notary Public - State of Texas

Exhibit “A”

SUBJECT PROPERTY DESCRIPTION
+/- 12.402 ACRES

BEING a 12.402 acre tract of land in Williamson County, Texas, situated in the Benjamin Owen Payn Survey, Abstract No. 508 in Williamson County, Texas, and being all of a called 12.396 acre tract of land conveyed to B Twisted, LLC, in Document No. 2020069304, of the Official Public Records of Williamson County, Texas.

Exhibit "B"

AGREEMENT REGARDING POST-ANNEXATION PROVISION OF SERVICES FOR PROPERTY TO BE ANNEXED INTO THE CITY OF LEANDER

This Agreement is entered into by and between the City of Leander, Texas, a municipal corporation ("City"), and B Twisted, LLC ("Landowner"), both of which may be referred to herein singularly as "Party" or collectively as the "Parties."

RECITALS

WHEREAS, upon the request of the Landowner, the City intends to institute annexation proceedings for an area of land described more fully hereinafter and attached hereto (the "subject property");

WHEREAS, Section 43.0672, Loc. Gov't. Code, requires the Parties to enter into a written agreement identifying a list of public services to be provided to the subject property and a schedule for the provision of those services that are not otherwise provided on the effective date of the annexation;

WHEREAS, this Agreement is being entered into by and between the Parties to comply with Texas Local Government Code, Chapter 43, Sub-Chapter C-3, Section 43.0672, prior to the City's consideration of an ordinance annexing the subject property, it being understood, acknowledged and agreed by the Parties that annexation of the subject property is a condition precedent to this Agreement becoming effective;

WHEREAS, this Agreement shall be deemed effective on the effective date of an ordinance approved by the City annexing the subject property (the "Effective Date").

WHEREAS, the subject property is not included in the municipal annexation plan and is exempt from the requirements thereof;

WHEREAS, infrastructure provided for herein and that are existing are sufficient to service the subject property on the same terms and conditions as other similarly situated properties currently within the City limits and no capital improvements are required to offer municipal services on the same terms and conditions as other similarly situated properties within the City; and

WHEREAS, it is found that all statutory requirements have been satisfied and the City is authorized by *Chapter 43, Loc. Gov't. Code*, to annex the subject property into the City;

NOW, THEREFORE, in consideration of the mutual covenants and agreements contained herein and for other good and valuable consideration, the receipt and sufficiency of which are hereby acknowledged, the Parties agree as follows:

The following services and schedule represent the provision of services agreed to between the Landowner of the subject property and the City establishing a program under which the City will provide municipal services to the subject property, as required by section 43.0672 of the Texas Local Government Code. The services detailed herein will be provided at a level consistent with service levels provided to other similarly situated areas within the City.

The following services will be provided for the subject property on the Effective Date of annexation:

(1) **General Municipal Services.** Pursuant to the requests of the owner and this Agreement, the following services shall be provided immediately from the effective date of the annexation:

A. Police protection as follows:

Routine patrols of areas, radio response to calls for police service and all other police services now being offered to the citizens of the City. Upon annexation, police protection will be provided to the subject property at a level consistent with the service to other areas of the City with similar population density and characteristics. The City's police services include neighborhood patrols, criminal investigations, crime prevention, community services and school programs.

B. Fire protection and Emergency Medical Services as follows:

Fire protection by the present personnel and equipment of the City fire fighting force and the volunteer fire fighting force with the limitations of water available. Radio response for Emergency Medical Services with the present personnel and equipment.

C. Solid waste collection services as follows:

Solid waste collection and services as now being offered to the citizens of the City. The City provides residential solid waste collection services within the City limits for a fee under a contract between the City and private refuse collection operator. The residential solid waste collection services include garbage collection, recycling, bulky item collection and yard waste collection. Commercial solid waste collection services are also available. This service will be provided for a fee to any person within the subject property requesting the service after the Effective Date of annexation, provided that a privately owned solid waste management service provider is unavailable. If the subject property is already receiving service, the City may not prohibit solid waste collection by the privately owned solid waste management service provider, nor may the City offer solid waste collection services for a period of two (2) years following the Effective Date of the annexation unless a privately owned solid waste management service provider is or becomes unavailable, as established by Texas Local Government Code section 43.0661. If a landowner uses the services of a privately owned solid waste management service provider or services are available from a privately owned solid waste management service provider during the two (2) years following annexation, the City will not provide solid waste collection services to that

landowner.

D. Animal control as follows:

Service by present personnel, equipment and facilities or by contract with a third party, as provided within the City.

E. Maintenance of City-owned parks and playgrounds within the City.

F. Inspection services in conjunction with building permits and routine City code enforcement services by present personnel, equipment and facilities. Municipal Court and General Administration services will also be available to property owners and residents in the subject property on the same basis those facilities are available to current City property owners and residents.

G. Maintenance of other City facilities, buildings and service.

H. Land use regulation as follows:

On the effective date of annexation, the zoning jurisdiction of the City shall be extended to include the annexed area, and the use of all property therein shall be grandfathered; and shall be temporarily zoned "SFR-1-B" with the intent to rezone the subject property upon request of the landowner or staff. The Planning & Zoning Commission and the City Council will consider rezoning the subject property at future times in response to requests submitted by the Landowner or authorized city staff. The City will impose and enforce its adopted ordinances, including but not limited to, zoning, subdivision development, site development and building code regulations within the subject property upon the Effective Date of the annexation. Enforcement will be in accordance with City ordinances. Development plans and plats for projects within the subject property will be reviewed for compliance with City standards.

(2) **Scheduled Municipal Services.** Due to the size and vacancy of the subject property, the plans and schedule for the development of the subject property, the following municipal services will be provided on a schedule and at increasing levels of service as provided herein:

A. Water service and maintenance of water facilities as follows:

(i) Inspection of water distribution lines as provided by statutes of the State of Texas.

(ii) In accordance with the applicable rules and regulations for the provision of water service, water service will be provided to the subject property, or applicable portions thereof, by the utility holding a water certificate of convenience and necessity ("CCN") for the subject property, or portions thereof as applicable, or absent a water CCN, by the utility in whose jurisdiction the subject property, or portions thereof as applicable, is located, in accordance with all the ordinances, regulations, and policies of the City in effect from time to time for the extension of water service. If connected to the City's water utility system, the

subject property's owner shall construct the internal water lines and pay the costs of line extension and construction of such facilities necessary to provide water service to the subject property as required in City ordinances. Upon acceptance of the water lines within the subject property and any off-site improvements, water service will be provided by the City utility department on the same terms, conditions and requirements as are applied to all similarly situated areas and customers of the City; subject to all the ordinances, regulations and policies of the City in effect from time to time. The system will be accepted and maintained by the City in accordance with its usual acceptance and maintenance policies. New water line extensions will be installed and extended upon request under the same costs and terms as with other similarly situated customers of the City. The ordinances of the City in effect at the time a request for service is submitted shall govern the costs and request for service. The continued use of a water well that is in use on the effective date of the annexation and is in compliance with applicable rules and regulations shall be permitted and such use may continue until the subject property's owner requests and is able to connect to the City's water utility system.

B. Wastewater service and maintenance of wastewater service as follows:

(i) Inspection of sewer lines as provided by statutes of the State of Texas.

(ii) In accordance with the applicable rules and regulations for the provision of wastewater service, wastewater service will be provided to the subjects property, or applicable portions thereof, by the utility holding a wastewater CCN for the subject property, or portions thereof as applicable, or absent a wastewater CCN, by the utility in whose jurisdiction the subject property, or portions thereof as applicable, is located, in accordance with all the ordinances, regulations, and policies of the City in effect from time to time for the extension of wastewater service. If connected to the City's wastewater utility system, the subject property's owner shall construct the internal wastewater lines and pay the costs of line extension and construction of facilities necessary to provide wastewater service to the subject property as required in City ordinances. Upon acceptance of the wastewater lines within the subject property and any off-site improvements, wastewater service will be provided by the City utility department on the same terms, conditions and requirements as are applied to all similarly situated areas and customers of the City, subject to all the ordinances, regulations and policies of the City in effect from time to time. The wastewater system will be accepted and maintained by the City in accordance with its usual policies. Requests for new wastewater line extensions will be installed and extended upon request under the same costs and terms as with other similarly situated customers of the City. The ordinances in effect at the time a request for service is submitted shall govern the costs and request for service. The continued use of a septic system that is in use on the effective date of the annexation and is in compliance with all applicable rules and regulations shall be permitted and such use may continue until the subject property owner requests and is able to connect to the City's wastewater utility system.

C. Maintenance of streets and rights-of-way as appropriate as follows:

(i) Provide maintenance services on existing public streets within the subject property and other streets that are hereafter constructed and finally accepted by the City. The maintenance of the streets and roads will be limited as follows:

(A) Emergency maintenance of streets, repair of hazardous potholes, measures necessary for traffic flow, etc.; and

(B) Routine maintenance as presently performed by the City.

(ii) The City will maintain existing public streets within the subject property, and following installation and acceptance of new roadways by the City as provided by city ordinance, including any required traffic signals, traffic signs, street markings, other traffic control devices and street lighting, the City will maintain such newly constructed public streets, roadways and rights-of-way within the boundaries of the subject property, as follows:

(A) As provided in C(i)(A)&(B) above;

(B) Reconstruction and resurfacing of streets, installation of drainage facilities, construction of curbs, gutters and other such major improvements as the need therefore is determined by the governing body under City policies;

(C) Installation and maintenance of traffic signals, traffic signs, street markings and other traffic control devices as the need therefore is established by appropriate study and traffic standards; and

(D) Installation and maintenance of street lighting in accordance with established policies of the City;

(iii) The outer boundaries of the subject property abut existing roadways. The Landowner agrees that no improvements are required on such roadways to service the subject property.

(3) **Capital Improvements.** Construction of the following capital improvements shall be initiated after the effective date of the annexation: None. Upon development of the subject property or redevelopment, the Landowner will be responsible for the development costs the same as a developer in a similarly situated area under the ordinances in effect at the time of development or redevelopment. No additional capital improvements are necessary at this time to service the subject property the same as similarly situated properties. When deemed necessary, capital improvement acquisition or construction will occur in accordance with applicable ordinances and regulations and the adopted capital improvement plans of the City, as applicable and amended, which are incorporated herein by reference.

(4) **Term.** If not previously expired, this agreement expires at the end of ten (10) years.

(5) **Property Description.** The legal description of the subject property is as set forth in the

Annexation Ordinance and exhibits attached to the Annexation Ordinance to which this Agreement is attached.

(6) **Binding Effect/Authority.** This Agreement binds and inures to the benefit of the Parties and their respective heirs, successors, and permitted assigns. Each Party further warrants that each signatory to this Agreement is legally authorized to bind the respective individual or entity for the purposes established herein.

(7) **Choice of Law.** This Agreement will be construed under the laws of the State of Texas, without regard to choice-of-law rules of any jurisdiction. Venue for any dispute shall lie exclusively in Williamson County, Texas.

(8) **Counterparts.** This Agreement may be executed in any number of counterparts with the same effect as if all signatory Parties had signed the same document. All counterparts will be construed together and will constitute one and the same instrument.

(9) **Legal Construction.** If any provision in this Agreement is for any reason found to be unenforceable, to the extent the unenforceability does not destroy the basis of the bargain among the Parties, the unenforceability will not affect any other provision hereof, and this Agreement will be construed as if the unenforceable provision had never been a part of the Agreement. Whenever context requires, the singular will include the plural and neuter include the masculine or feminine gender, and vice versa. Headings in this Agreement are for reference only and are not intended to restrict or define the text of any section. This Agreement will not be construed more or less favorably between the Parties by reason of authorship or origin of language.

(10) **Entire Agreement.** This Agreement contains the entire Agreement between the Parties relating to the rights herein granted and the obligations herein assumed and cannot be varied except by written agreement of the Parties. Any oral representation or modification concerning this instrument shall be of no force and effect except for any subsequent modification in writing, signed by the Party to be charged.

EXECUTED and AGREED to by the Parties this the ___ day of _____, 20___.

ATTEST:	**THE CITY OF LEANDER, TEXAS**
_____	_____
Dara Crabtree, City Secretary	Richard Beverlin, III, City Manager

LANDOWNER(S):

_____

By: _____

Name (print): _____

Title: _____

Date: _____

_____

By: _____

Name (print): _____

Title: _____

Date: _____

Subject Property Description

+/- 12.402 ACRES

BEING a 12.402 acre tract of land in Williamson County, Texas, situated in the Benjamin Owen Payn Survey, Abstract No. 508 in Williamson County, Texas, and being all of a called 12.396 acre tract of land conveyed to B Twisted, LLC, in Document No. 2020069304, of the Official Public Records of Williamson County, Texas.

AGREEMENT REGARDING POST-ANNEXATION PROVISION OF SERVICES FOR PROPERTY TO BE ANNEXED INTO THE CITY OF LEANDER

This Agreement is entered into by and between the City of Leander, Texas, a municipal corporation ("City"), and B Twisted, LLC, a Texas limited liability company ("Landowner"), both of which may be referred to herein singularly as "Party" or collectively as the "Parties."

RECITALS

WHEREAS, upon the request of the Landowner, the City intends to institute annexation proceedings for an area of land described more fully hereinafter and attached hereto, less and except any property previously annexed by the City. (the "subject property"); and

WHEREAS, Section 43.0672, Loc. Gov't. Code, requires the Parties to enter into a written agreement identifying a list of public services to be provided to the subject property and a schedule for the provision of those services that are not otherwise provided on the effective date of the annexation; and

WHEREAS, this Agreement is being entered into by and between the Parties to comply with Texas Local Government Code, Chapter 43, Sub-Chapter C-3, Section 43.0672, prior to the City's consideration of an ordinance annexing the subject property, it being understood, acknowledged and agreed by the Parties that annexation of the subject property is a condition precedent to this Agreement becoming effective; and

WHEREAS, this Agreement shall be deemed effective on the effective date of an ordinance approved by the City annexing the subject property (hereinafter, the "Effective Date"); and

WHEREAS, the subject property is not included in the municipal annexation plan and is exempt from the requirements thereof; and

WHEREAS, the infrastructure provided for herein and that are existing are sufficient to service the subject property on the same terms and conditions as other similarly situated properties currently within the City limits and no capital improvements are required to offer municipal services on the same terms and conditions as other similarly situated properties within the City; and

WHEREAS, it is found that all statutory requirements have been satisfied and the City is authorized by *Chapter 43, Loc. Gov't. Code*, to annex the subject property into the City; and

NOW, THEREFORE, in consideration of the mutual covenants and agreements contained herein and for other good and valuable consideration, the receipt and sufficiency of which are hereby acknowledged, the Parties agree as follows:

The following services and schedule represent the provision of services agreed to between the Landowner of the subject property and the City establishing a program under which the City will provide municipal services to the subject property, as required by section 43.0672 of the Texas Local Government Code. The services detailed herein will be provided at a level consistent with service

levels provided to other similarly situated areas within the City.

The following services will be provided for the subject property on the Effective Date of annexation:

(1) **General Municipal Services.** Pursuant to the requests of the owner and this Agreement, the following services shall be provided immediately from the effective date of the annexation:

A. Police protection as follows:

Routine patrols of areas, radio response to calls for police service and all other police services now being offered to the citizens of the City. Upon annexation, police protection will be provided to the subject property at a level consistent with the service to other areas of the City with similar population density and characteristics. The City's police services include neighborhood patrols, criminal investigations, crime prevention, community services and school programs.

B. Fire protection and Emergency Medical Services as follows:

Fire protection by the present personnel and equipment of the City fire fighting force and the volunteer fire fighting force with the limitations of water available. Radio response for Emergency Medical Services with the present personnel and equipment.

C. Solid waste collection services as follows:

Solid waste collection and services as now being offered to the citizens of the City. The City provides residential solid waste collection services within the City limits for a fee under a contract between the City and private refuse collection operator. The residential solid waste collection services include garbage collection, recycling, bulky item collection and yard waste collection. Commercial solid waste collection services are also available. This service will be provided for a fee to any person within the subject property requesting the service after the Effective Date of annexation, provided that a privately owned solid waste management service provider is unavailable. If the subject property is already receiving service, the City may not prohibit solid waste collection by the privately owned solid waste management service provider, nor may the City offer solid waste collection services for a period of two (2) years following the Effective Date of the annexation unless a privately owned solid waste management service provider is or becomes unavailable, as established by Texas Local Government Code section 43.0661. If a landowner uses the services of a privately owned solid waste management service provider or services are available from a privately owned solid waste management service provider during the two (2) years following annexation, the City will not provide solid waste collection services to that landowner.

D. Animal control as follows:

Service by present personnel, equipment and facilities or by contract with a third party, as provided within the City.

E. Maintenance of City-owned parks and playgrounds within the City.

F. Inspection services in conjunction with building permits and routine City code enforcement services by present personnel, equipment and facilities. Municipal Court and General Administration services will also be available to property owners and residents in the subject property on the same basis those facilities are available to current City property owners and residents.

G. Maintenance of other City facilities, buildings and service.

H. Land use regulation as follows:

On the effective date of annexation, the zoning jurisdiction of the City shall be extended to include the annexed area, and the use of all property therein shall be grandfathered; and shall be temporarily zoned "SFR-1-B" with the intent to rezone the subject property upon request of the landowner or staff. The Planning & Zoning Commission and the City Council will consider rezoning the subject property at future times in response to requests submitted by the Landowner or authorized city staff. The City will impose and enforce its adopted ordinances, including but not limited to, zoning, subdivision development, site development and building code regulations within the subject property upon the Effective Date of the annexation. Enforcement will be in accordance with City ordinances. Development plans and plats for projects within the subject property will be reviewed for compliance with City standards.

(2) **Scheduled Municipal Services.** Due to the size and vacancy of the subject property, the plans and schedule for the development of the subject property, the following municipal services will be provided on a schedule and at increasing levels of service as provided herein:

A. Water service and maintenance of water facilities as follows:

(i) Inspection of water distribution lines as provided by statutes of the State of Texas.

(ii) In accordance with the applicable rules and regulations for the provision of water service, water service will be provided to the subject property, or applicable portions thereof, by the utility holding a water certificate of convenience and necessity ("CCN") for the subject property, or portions thereof as applicable, or absent a water CCN, by the utility in whose jurisdiction the subject property, or portions thereof as applicable, is located, in accordance with all the ordinances, regulations, and policies of the City in effect from time to time for the extension of water service. If connected to the City's water utility system, the subject property's owner shall construct the internal water lines and pay the costs of line extension and construction of such facilities necessary to provide water service to the subject property as required in City ordinances. Upon acceptance of the water lines within the subject property and any off-site improvements, water service will be provided by the City utility department on the same terms, conditions and requirements as are applied to all similarly situated areas and customers of the City; subject to all the ordinances, regulations and policies of the City in effect from time to time. The system will be accepted and maintained by the City in

accordance with its usual acceptance and maintenance policies. New water line extensions will be installed and extended upon request under the same costs and terms as with other similarly situated customers of the City. The ordinances of the City in effect at the time a request for service is submitted shall govern the costs and request for service. The continued use of a water well that is in use on the effective date of the annexation and is in compliance with applicable rules and regulations shall be permitted and such use may continue until the subject property's owner requests and is able to connect to the City's water utility system.

B. Wastewater service and maintenance of wastewater service as follows:

(i) Inspection of sewer lines as provided by statutes of the State of Texas.

(ii) In accordance with the applicable rules and regulations for the provision of wastewater service, wastewater service will be provided to the subjects property, or applicable portions thereof, by the utility holding a wastewater CCN for the subject property, or portions thereof as applicable, or absent a wastewater CCN, by the utility in whose jurisdiction the subject property, or portions thereof as applicable, is located, in accordance with all the ordinances, regulations, and policies of the City in effect from time to time for the extension of wastewater service. If connected to the City's wastewater utility system, the subject property's owner shall construct the internal wastewater lines and pay the costs of line extension and construction of facilities necessary to provide wastewater service to the subject property as required in City ordinances. Upon acceptance of the wastewater lines within the subject property and any off-site improvements, wastewater service will be provided by the City utility department on the same terms, conditions and requirements as are applied to all similarly situated areas and customers of the City, subject to all the ordinances, regulations and policies of the City in effect from time to time. The wastewater system will be accepted and maintained by the City in accordance with its usual policies. Requests for new wastewater line extensions will be installed and extended upon request under the same costs and terms as with other similarly situated customers of the City. The ordinances in effect at the time a request for service is submitted shall govern the costs and request for service. The continued use of a septic system that is in use on the effective date of the annexation and is in compliance with all applicable rules and regulations shall be permitted and such use may continue until the subject property owner requests and is able to connect to the City's wastewater utility system.

C. Maintenance of streets and rights-of-way as appropriate as follows:

(i) Provide maintenance services on existing public streets within the subject property and other streets that are hereafter constructed and finally accepted by the City. The maintenance of the streets and roads will be limited as follows:

(A) Emergency maintenance of streets, repair of hazardous potholes, measures necessary for traffic flow, etc.; and

(B) Routine maintenance as presently performed by the City.

(ii) The City will maintain existing public streets within the subject property, and following installation and acceptance of new roadways by the City as provided by city ordinance, including any required traffic signals, traffic signs, street markings, other traffic control devices and street lighting, the City will maintain such newly constructed public streets, roadways and rights-of-way within the boundaries of the subject property, as follows:

(A) As provided in C(i)(A)&(B) above;

(B) Reconstruction and resurfacing of streets, installation of drainage facilities, construction of curbs, gutters and other such major improvements as the need therefore is determined by the governing body under City policies;

(C) Installation and maintenance of traffic signals, traffic signs, street markings and other traffic control devices as the need therefore is established by appropriate study and traffic standards; and

(D) Installation and maintenance of street lighting in accordance with established policies of the City;

(iii) The outer boundaries of the subject property abut existing roadways. The Landowner agrees that no improvements are required on such roadways to service the subject property.

(3) **Capital Improvements.** Construction of the following capital improvements shall be initiated after the effective date of the annexation: None. Upon development of the subject property or redevelopment, the Landowner will be responsible for the development costs the same as a developer in a similarly situated area under the ordinances in effect at the time of development or redevelopment. No additional capital improvements are necessary at this time to service the subject property the same as similarly situated properties. When deemed necessary, capital improvement acquisition or construction will occur in accordance with applicable ordinances and regulations and the adopted capital improvement plans of the City, as applicable and amended, which are incorporated herein by reference.

(4) **Term.** If not previously expired, this agreement expires at the end of ten (10) years.

(5) **Property Description.** The legal description of the subject property is as set forth in the Annexation Ordinance and exhibits attached to the Annexation Ordinance to which this Agreement is attached.

(6) **Binding Effect/Authority.** This Agreement binds and inures to the benefit of the Parties and their respective heirs, successors, and permitted assigns. Each Party further warrants that each signatory to this Agreement is legally authorized to bind the respective individual or entity for the purposes established herein.

(7) **Choice of Law.** This Agreement will be construed under the laws of the State of Texas, without regard to choice-of-law rules of any jurisdiction. Venue for any dispute shall lie exclusively in Williamson County, Texas.

(8) **Counterparts.** This Agreement may be executed in any number of counterparts with the same effect as if all signatory Parties had signed the same document. All counterparts will be construed together and will constitute one and the same instrument.

(9) **Legal Construction.** If any provision in this Agreement is for any reason found to be unenforceable, to the extent the unenforceability does not destroy the basis of the bargain among the Parties, the unenforceability will not affect any other provision hereof, and this Agreement will be construed as if the unenforceable provision had never been a part of the Agreement. Whenever context requires, the singular will include the plural and neuter include the masculine or feminine gender, and vice versa. Headings in this Agreement are for reference only and are not intended to restrict or define the text of any section. This Agreement will not be construed more or less favorably between the Parties by reason of authorship or origin of language.

(10) **Entire Agreement.** This Agreement contains the entire Agreement between the Parties relating to the rights herein granted and the obligations herein assumed and cannot be varied except by written agreement of the Parties. Any oral representation or modification concerning this instrument shall be of no force and effect except for any subsequent modification in writing, signed by the Party to be charged.

EXECUTED and AGREED to by the Parties this the ___ day of _____, 20___.

ATTEST:	**THE CITY OF LEANDER, TEXAS**
_____	_____
Dara Crabtree, City Secretary	Richard B. Beverlin, III, City Manager

LANDOWNER(S):

B TWISTED, LLC

By: _____

Name (print): _____

Title: _____

Date: _____

_____

By: _____

Name (print): _____

Title: _____

Date: _____

Subject Property Description

BEING a 12.402 acre tract of land in Williamson County, Texas, situated in the Benjamin Owen Payn Survey, Abstract No. 508 in Williamson County, Texas, and being all of a called 12.396 acre tract of land conveyed to B Twisted, LLC, in Document No. 2020069304, of the Official Public Records of Williamson County, Texas.

CASE: 22-A-005

ATTACHMENT #3

B TWISTED

Location Map

This map has been produced by the City of Leander for informational purposes only. No warranty is made by the City regarding completeness or accuracy. This data should not be construed as a legal description or survey instrument. No responsibility is assumed for damages or other liabilities due to the accuracy, availability, completeness, use or misuse of the information herin provided.

N

0 135 270

Feet

Subject Area

Leander City Limits

ETJ

Schedule for Voluntary Annexation
B TWISTED 12.402 Acres, Less and Except any Property Already Annexed into the City of Leander

DATE	ACTION/EVENT	LEGAL AUTHORITY
Monday, December 15th, 2022* Tuesday, December 6th, 2022 – Council packet deadline	COUNCIL CONSIDERS ACCEPTANCE OF ANNEXATION PETITION REQUEST FROM LANDOWNER(S) AND INITIATION OF ANNEXATION - AND SETS A PUBLIC HEARING FOR **THURSDAY, JANUARY 5TH, 2023.**	Loc. Gov't Code, §43.0671
Thursday DECEMBER 22, 2022 * Publish notice of Public Hearing. **&** Send notice to school district and to each public entity. **[Noon, Friday, DECEMBER 16, 2022 – Deadline to send notice to paper]**	**NEWSPAPER NOTICE** RE: PUBLIC HEARING; (Certified Notice to Railroad - if railroad company's right-of-way is in the area proposed for annexation.) **POST NOTICE OF HEARING ON CITY'S WEBSITE AND MAINTAIN UNTIL HEARINGS COMPLETE.** **SCHOOL DISTRICT NOTICE**. Notify each school district of possible impact w/in the period prescribed for publishing the notice of the Public Hearing. **PUBLIC ENTITY NOTICES**. Notify each public entity that is located in or provides services to the area proposed for annexation. Public Entity includes: a county (Williamson), a fire protection service provider, including a volunteer fire department, emergency medical services provider, including a volunteer emergency medical services provider, or special district (MUD, WCID, or other district created under Section 52, Article III, or Section 59, Article XVI, Texas Constitution) - of possible impact w/in the period prescribed for publishing the notice of the Public Hearing.	Not less than 10 days nor more than 20 days before public hearing. Loc. Gov't Code, §43.0673 Loc. Gov't Code, §§43.905 & 43.9051; send notice to school district and to each public entity not less than 10 days nor more than 20 days before the Public Hearing.
Thursday, JANUARY 5, 2023*	**PUBLIC HEARING** – *REGULAR MEETING*	The governing body must provide persons interested in the annexation the opportunity to be heard. Loc. Gov't Code, §43.0673
Thursday, JANUARY 5, 2023 Tuesday, October 25th 2022 – Council packet deadline	**FIRST READING** OF ORDINANCE *REGULAR MEETING*	Loc. Gov't Code, §43.0673

Thursday, JANUARY 19th, 2023 Or at a special called meeting after the First Reading; Or within 90 days of First Reading. Tuesday, JANUARY 10, 2023 – Council packet deadline	**SECOND & FINAL READING** OF ORDINANCE *REGULAR MEETING*	Second reading of annexation Ordinance – City Charter, Section 4.06(c)
Within 30 days of Second Reading	**CITY SENDS COPY OF MAP** showing boundary changes to County Voter Registrar in a format that is compatible with mapping format used by registrar	Elec. Code §42.0615
Within 60 days of Second Reading	**CITY PROVIDES CERTIFIED COPY OF ORDINANCE AND MAPS TO:** 1. County Clerk 2. County Appraisal District 3. County Tax Assessor Collector 4. 911 Addressing 5. Sheriff's Office 6. City Department Heads 7. State Comptroller 8. Franchise Holders ESD - if annexed area located in district and city intends to remove the area from the district and be the sole provider of emergency services; See Health and Safety Code, Section 775.022	Williamson County ESD No. 5: Notice must be sent to the secretary of the ESD board by certified mail, return receipt requested, as applicable.

***Dates in BOLD are MANDATORY dates to follow. Please advise of schedule deviation.**

RESOLUTION NO. 22-037-00

A RESOLUTION OF THE CITY OF LEANDER, TEXAS, ACCEPTING THE PETITION FOR ANNEXATION OF 12.402 ACRES, MORE OR LESS, OF LAND LOCATED IN WILLIAMSON COUNTY, TEXAS; SETTING AN ANNEXATION SCHEDULE; PROVIDING FOR OPEN MEETINGS AND OTHER RELATED MATTERS.

WHEREAS, the owners of certain property located within Williamson County, Texas, have petitioned the City of Leander, Texas, (hereinafter, the "City"), a home-rule City, for annexation of said property, more particularly described herein (hereinafter, the "subject property"), into the City limits; and

WHEREAS, the subject property is contiguous and adjacent to the corporate limits of the City and the owner(s) have made application for annexation; and

WHEREAS, after review and consideration of such requests and petition for annexation from the owners of the subject property, the City Council finds that the subject property may be annexed pursuant to §43.0671 of the *Local Government Code*; and

WHEREAS, the petitioner has agreed and consented to the annexation of the subject property by the City and further agreed to be bound by all acts, ordinances, and all other legal action now in force and effect within the corporate limits of the City and all those which may be hereafter adopted.

NOW, THEREFORE, BE IT RESOLVED BY THE CITY COUNCIL OF THE CITY OF LEANDER, TEXAS, THAT:

Section 1. Findings. The foregoing recitals are hereby found to be true and correct and are hereby adopted by the City Council and made a part hereof for all purposes as findings of fact.

Section 2. Proceedings. The petition for annexation of the subject property, including the abutting streets, roadways, and rights of way, not previously annexed into the City, and the draft service plan shown in **Exhibit B**, are hereby accepted:

> All that certain area of land being 12.402 acres, more or less, located in Williamson County, Texas, being more particularly described in recorded in Document No. 2020069304 of the Official Public Records of Williamson County, Texas, and being more particularly shown and described in the **Exhibit "A"** attached hereto and incorporated herein for all purposes.

A public hearing has been set for the date of **January 5, 2023**. Notice of such hearing shall be posted and the hearing shall be open to the public to accept public comment on the annexation request. In the event of a conflict between the subject property description contained herein, **Exhibit A** shall control.

Section 3. Severability. Should any section or part of this Resolution be held unconstitutional, illegal, or invalid, or the application to any person or circumstance thereof ineffective or inapplicable, such unconstitutionality, illegality, invalidity, or ineffectiveness of such section or part shall in no way affect, impair or invalidate the remaining portion or portions thereof; but as to such remaining portion or portions, the same shall be and remain in full force and effect and to this end the provisions of this Resolution are declared to be severable.

Section 4. Open Meetings. It is hereby officially found and determined that the meeting at which this Resolution is passed was open to the public as required and that public notice of the time, place, and purpose of said meeting was given as required by the Open Meetings Act, *Chapt. 551, Tex. Gov't. Code*.

PASSED AND APPROVED this the ___ day of _____, 2022.

ATTEST:	**THE CITY OF LEANDER, TEXAS**
_____	_____
Dara Crabtree, City Secretary	Christine DeLisle, Mayor

<u>Exhibit A</u>

SUBJECT PROPERTY DESCRIPTION

BEING a 12.402 acre tract of land in Williamson County, Texas, situated in the Benjamin Owen Payn Survey, Abstract No. 508 in Williamson County, Texas, and being all of a called 12.396 acre tract of land conveyed to B Twisted, LLC, in Document No. 2020069304, of the Official Public Records of Williamson County, Texas.

Exhibit B

AGREEMENT REGARDING POST-ANNEXATION PROVISION OF SERVICES FOR PROPERTY TO BE ANNEXED INTO THE CITY OF LEANDER

This Agreement is entered into by and between the City of Leander, Texas, a municipal corporation ("City"), and B Twisted, LLC, a Texas limited liability company ("Landowner"), both of which may be referred to herein singularly as "Party" or collectively as the "Parties."

RECITALS

WHEREAS, upon the request of the Landowner, the City intends to institute annexation proceedings for an area of land described more fully hereinafter and attached hereto, less and except any property previously annexed by the City. (the "subject property"); and

WHEREAS, Section 43.0672, Loc. Gov't. Code, requires the Parties to enter into a written agreement identifying a list of public services to be provided to the subject property and a schedule for the provision of those services that are not otherwise provided on the effective date of the annexation; and

WHEREAS, this Agreement is being entered into by and between the Parties to comply with Texas Local Government Code, Chapter 43, Sub-Chapter C-3, Section 43.0672, prior to the City's consideration of an ordinance annexing the subject property, it being understood, acknowledged and agreed by the Parties that annexation of the subject property is a condition precedent to this Agreement becoming effective; and

WHEREAS, this Agreement shall be deemed effective on the effective date of an ordinance approved by the City annexing the subject property (hereinafter, the "Effective Date"); and

WHEREAS, the subject property is not included in the municipal annexation plan and is exempt from the requirements thereof; and

WHEREAS, the infrastructure provided for herein and that are existing are sufficient to service the subject property on the same terms and conditions as other similarly situated properties

currently within the City limits and no capital improvements are required to offer municipal services on the same terms and conditions as other similarly situated properties within the City; and

WHEREAS, it is found that all statutory requirements have been satisfied and the City is authorized by *Chapter 43, Loc. Gov't. Code*, to annex the subject property into the City; and

NOW, THEREFORE, in consideration of the mutual covenants and agreements contained herein and for other good and valuable consideration, the receipt and sufficiency of which are hereby acknowledged, the Parties agree as follows:

The following services and schedule represent the provision of services agreed to between the Landowner of the subject property and the City establishing a program under which the City will provide municipal services to the subject property, as required by section 43.0672 of the Texas Local Government Code. The services detailed herein will be provided at a level consistent with service levels provided to other similarly situated areas within the City.

The following services will be provided for the subject property on the Effective Date of annexation:

(1) **General Municipal Services.** Pursuant to the requests of the owner and this Agreement, the following services shall be provided immediately from the effective date of the annexation:

A. Police protection as follows:

Routine patrols of areas, radio response to calls for police service and all other police services now being offered to the citizens of the City. Upon annexation, police protection will be provided to the subject property at a level consistent with the service to other areas of the City with similar population density and characteristics. The City's police services include neighborhood patrols, criminal investigations, crime prevention, community services and school programs.

B. Fire protection and Emergency Medical Services as follows:

Fire protection by the present personnel and equipment of the City fire fighting force and the volunteer fire fighting force with the limitations of water available. Radio response for Emergency Medical Services with the present personnel and equipment.

C. Solid waste collection services as follows:

Solid waste collection and services as now being offered to the citizens of the City. The City provides residential solid waste collection services within the City limits for a fee under a contract between the City and private refuse collection operator. The residential solid waste collection services include garbage collection, recycling, bulky item collection and yard waste collection. Commercial solid waste collection services are also available. This service will be provided for a fee to any person within the subject property requesting the service after the Effective Date of annexation, provided that a privately owned solid waste management service provider is unavailable. If the subject property is already receiving service, the City may not prohibit solid waste collection by the privately owned solid waste management service provider, nor may the City offer solid waste collection services for a period of two (2) years following the Effective Date of the annexation unless a privately owned solid waste management service provider is or becomes unavailable, as established by Texas Local Government Code section 43.0661. If a landowner uses the services of a privately owned solid waste management service provider or services are available from a privately owned solid waste management service provider during the two (2) years following annexation, the City will not provide solid waste collection services to that landowner.

D. Animal control as follows:

Service by present personnel, equipment and facilities or by contract with a third party, as provided within the City.

E. Maintenance of City-owned parks and playgrounds within the City.

F. Inspection services in conjunction with building permits and routine City code enforcement services by present personnel, equipment and facilities. Municipal Court and General Administration services will also be available to property owners and residents in the subject property on the same basis those facilities are available to current City property owners and residents.

G. Maintenance of other City facilities, buildings and service.

H. Land use regulation as follows:

On the effective date of annexation, the zoning jurisdiction of the City shall be extended to include the annexed area, and the use of all property therein shall be grandfathered; and shall be temporarily zoned "SFR-1-B" with the intent to rezone the subject property upon request of the landowner or staff. The Planning & Zoning Commission and the City Council will consider rezoning the subject property at future times in response to requests submitted by the Landowner or authorized city staff. The City will impose and enforce its adopted ordinances, including but not limited to, zoning, subdivision development, site development and building code regulations within the subject property upon the Effective Date of the annexation. Enforcement will be in accordance with City ordinances. Development plans and plats for projects within the subject property will be reviewed for compliance with City standards.

(2) **Scheduled Municipal Services.** Due to the size and vacancy of the subject property, the plans and schedule for the development of the subject property, the following municipal services will be provided on a schedule and at increasing levels of service as provided herein:

A. Water service and maintenance of water facilities as follows:

(i) Inspection of water distribution lines as provided by statutes of the State of Texas.

(ii) In accordance with the applicable rules and regulations for the provision of water service, water service will be provided to the subject property, or applicable portions thereof, by the utility holding a water certificate of convenience and necessity ("CCN") for the subject property, or portions thereof as applicable, or absent a water CCN, by the utility in whose jurisdiction the subject property, or portions thereof as applicable, is located, in accordance with all the ordinances, regulations, and policies of the City in effect from time to time for the extension of water service. If connected to the City's water utility system, the subject property's owner shall construct the internal water lines and pay the costs of line extension and construction of such facilities necessary to provide water service to the subject property as required in City ordinances. Upon acceptance of the water lines within the subject property and any off-site improvements, water service will be provided by the City utility department on the same terms, conditions and requirements as are applied to all similarly situated areas and customers of the City; subject to all the ordinances, regulations and policies of the City in effect from time to time. The system will be accepted and maintained by the City in accordance with its usual acceptance and maintenance policies. New water line extensions will be installed and extended upon request under the same costs and terms as with other similarly situated customers of the City. The ordinances of the City in effect at the time a request for service is submitted shall govern the costs and request for service. The continued use of a water well that is in use on the effective date of the annexation and is in compliance with applicable rules and regulations shall be permitted and such use may continue until the subject property's owner requests and is able to connect to the City's water utility system.

B. Wastewater service and maintenance of wastewater service as follows:

(i) Inspection of sewer lines as provided by statutes of the State of Texas.

(ii) In accordance with the applicable rules and regulations for the provision of wastewater service, wastewater service will be provided to the subjects property, or applicable portions thereof, by the utility holding a wastewater CCN for the subject property, or portions thereof as applicable, or absent a wastewater CCN, by the utility in whose jurisdiction the subject property, or portions thereof as applicable, is located, in accordance with all the ordinances, regulations, and policies of the City in effect from time to time for the extension of wastewater service. If connected to the City's wastewater utility system, the subject property's owner shall construct the internal wastewater lines and pay the costs of line extension and construction of facilities necessary to provide wastewater service to the subject property as required in City ordinances. Upon acceptance of the wastewater lines within the subject property and any off-site improvements, wastewater service will be provided by the City utility department on the same terms, conditions and requirements as are applied to all similarly situated areas and customers of the City, subject to all the ordinances, regulations and policies of the City in effect from time to time. The wastewater system will be accepted and maintained by the City in accordance with its usual policies. Requests for new wastewater line extensions will be installed and extended upon request under the same costs and terms as with other similarly situated customers of the City. The ordinances in effect at the time a request for service is submitted shall govern the costs and request for service. The continued use of a septic system that is in use on the effective date of the annexation and is in compliance with all applicable rules and regulations shall be permitted and such use may continue until the subject property owner requests and is able to connect to the City's wastewater utility system.

C. Maintenance of streets and rights-of-way as appropriate as follows:

(i) Provide maintenance services on existing public streets within the subject property and other streets that are hereafter constructed and finally accepted by the City. The maintenance of the streets and roads will be limited as follows:

(A) Emergency maintenance of streets, repair of hazardous potholes, measures necessary for traffic flow, etc.; and

(B) Routine maintenance as presently performed by the City.

(ii) The City will maintain existing public streets within the subject property, and following installation and acceptance of new roadways by the City as provided by city ordinance, including any required traffic signals, traffic signs, street markings, other traffic control devices and street lighting, the City will maintain such newly constructed public streets, roadways and rights-of-way within the boundaries of the subject property, as follows:

(A) As provided in C(i)(A)&(B) above;

(B) Reconstruction and resurfacing of streets, installation of drainage facilities, construction of curbs, gutters and other such major improvements as the need therefore is determined by the governing body under City policies;

(C) Installation and maintenance of traffic signals, traffic signs, street markings and other traffic control devices as the need therefore is established by appropriate study and traffic standards; and

(D) Installation and maintenance of street lighting in accordance with established policies of the City;

(iii) The outer boundaries of the subject property abut existing roadways. The Landowner agrees that no improvements are required on such roadways to service the subject property.

(3) **Capital Improvements.** Construction of the following capital improvements shall be initiated after the effective date of the annexation: None. Upon development of the subject property or redevelopment, the Landowner will be responsible for the development costs the same as a developer in a similarly situated area under the ordinances in effect at the time of development or redevelopment. No additional capital improvements are necessary at this time to service the subject property the same as similarly situated properties. When deemed necessary, capital improvement acquisition or construction will occur in accordance with applicable ordinances and regulations and the adopted capital improvement plans of the City, as applicable and amended, which are incorporated herein by reference.

(4) **Term.** If not previously expired, this agreement expires at the end of ten (10) years.

(5) **Property Description.** The legal description of the subject property is as set forth in the Annexation Ordinance and exhibits attached to the Annexation Ordinance to which this Agreement is attached.

(6) **Binding Effect/Authority.** This Agreement binds and inures to the benefit of the Parties and their respective heirs, successors, and permitted assigns. Each Party further warrants that each signatory to this Agreement is legally authorized to bind the respective individual or entity for the purposes established herein.

(7) **Choice of Law.** This Agreement will be construed under the laws of the State of Texas, without regard to choice-of-law rules of any jurisdiction. Venue for any dispute shall lie exclusively in Williamson County, Texas.

(8) **Counterparts.** This Agreement may be executed in any number of counterparts with the same effect as if all signatory Parties had signed the same document. All counterparts will be construed together and will constitute one and the same instrument.

(9) **Legal Construction.** If any provision in this Agreement is for any reason found to be unenforceable, to the extent the unenforceability does not destroy the basis of the bargain among the Parties, the unenforceability will not affect any other provision hereof, and this Agreement will be construed as if the unenforceable provision had never been a part of the Agreement. Whenever context requires, the singular will include the plural and neuter include the masculine or feminine gender, and vice versa. Headings in this Agreement are for reference only and are not intended to restrict or define the text of any section. This Agreement will not be construed more or less favorably between the Parties by reason of authorship or origin of language.

(10) **Entire Agreement.** This Agreement contains the entire Agreement between the Parties relating to the rights herein granted and the obligations herein assumed and cannot be varied except by written agreement of the Parties. Any oral representation or modification concerning this instrument shall be of no force and effect except for any subsequent modification in writing, signed by the Party to be charged.

EXECUTED and AGREED to by the Parties this the ___ day of _____, 20___.

ATTEST: **THE CITY OF LEANDER, TEXAS**

_____ _____

Dara Crabtree, City Secretary Richard B. Beverlin, III, City Manager

LANDOWNER(S):

B TWISTED, LLC

By: _____

Name (print): _____

Title: _____

Date: _____

_____

By: _____

Name (print): _____

Title: _____

Date: _____

Subject Property Description

BEING a 12.402 acre tract of land in Williamson County, Texas, situated in the Benjamin Owen Payn Survey, Abstract No. 508 in Williamson County, Texas, and being all of a called 12.396 acre tract of land conveyed to B Twisted, LLC, in Document No. 2020069304, of the Official Public Records of Williamson County, Texas.

AN ORDINANCE OF THE CITY OF LEANDER, TEXAS

ORDINANCE NO.

AN ORDINANCE OF THE CITY OF LEANDER, TEXAS ANNEXING 12.402 ACRES OF LAND, MORE OR LESS, LOCATED IN WILLIAMSON COUNTY, INCLUDING THE ABUTTING STREETS, ROADWAYS, AND RIGHTS-OF-WAY INTO THE CORPORATE LIMITS OF THE CITY, AT THE REQUEST OF THE PROPERTY OWNER; APPROVING AN AGREEMENT FOR THE PROVISION OF SERVICES FOR THE ANNEXED AREA; MAKING FINDINGS OF FACT; PROVIDING A SEVERABILITY CLAUSE AND AN EFFECTIVE DATE; AND PROVIDING FOR OPEN MEETINGS AND OTHER RELATED MATTERS.

WHEREAS, the City of Leander, Texas, is a home rule municipality authorized by State law to annex territory lying adjacent and contiguous to the City;

WHEREAS, the owners of the property, as hereinafter described, made written request for the City to annex such property in compliance with the *Tex. Loc. Gov't. Code*;

WHEREAS, the property is adjacent and contiguous to the present city limits;

WHEREAS, the City Council heard and has decided to grant the owners' request that the City annex said property;

WHEREAS, a public hearing was conducted prior to consideration of this Ordinance in accordance with §*43.0673 of the Tex. Loc. Gov't. Code*;

WHEREAS, notice of the public hearing was published not more than twenty (20) nor less than ten (10) days prior to the public hearing;

WHEREAS, the City intends to provide services to the property to be annexed according to the agreement for the provision of services attached hereto as **Exhibit "B"**.

NOW, THEREFORE, BE IT ORDAINED BY THE CITY COUNCIL OF THE CITY OF LEANDER, TEXAS:

SECTION 1. That all of the above premises and findings of fact are found to be true and correct and are incorporated into the body of this Ordinance as if copied in their entirety.

SECTION 2. All portions of the following described properties (hereinafter referred to as the "Annexed Property"), not previously annexed into the City, including the abutting streets, roadways and rights-of-way, are hereby annexed into the corporate limits of the City of Leander:

> All that certain area of land being 12.402 acres, more or less, located in Williamson County, Texas, being more particularly described in recorded in Document No. 2020069304 of the Official Public Records of Williamson County, Texas, and being more particularly shown and described in the **Exhibit "A"** attached hereto and

incorporated herein for all purposes.

SECTION 3. That the provision of services agreement submitted herewith is hereby approved as part of this Ordinance, made a part hereof and attached hereto as **Exhibit "B"**.

SECTION 4. That the future owners and inhabitants of the Annexed Property shall be entitled to all of the rights and privileges of the City as set forth in the provisions of services agreement attached hereto as **Exhibit "B"**, and are further bound by all acts, ordinances, and all other legal action now in full force and effect and all those which may be hereafter adopted.

SECTION 5. That the official map and boundaries of the City, heretofore adopted and amended be and hereby are amended so as to include the Annexed Property as part of the City of Leander.

SECTION 6. That the Annexed Property shall be temporarily zoned District "SFR-1-B" as provided in the City Zoning Ordinance, as amended, until permanent zoning is established therefore.

SECTION 7. That if any provision of this Ordinance or the application of any provision to any person or circumstance is held invalid, the invalidity shall not affect other provisions or applications of the ordinance which can be given effect without the invalid provision or application, and to this end the provisions of this Ordinance are declared to be severable.

SECTION 8. That this Ordinance shall take effect immediately from and after its passage and publication in accordance with the provisions of the *Tex. Loc. Gov't. Code*.

SECTION 9. That it is hereby officially found and determined that the meeting at which this Ordinance is passed was open to the public as required and that public notice of the time, place, and purpose of said meeting was given as required by the Open Meetings Act, *Chapt. 551, Tex. Gov't. Code*.

PASSED AND APPROVED on First Reading this 5th day of January, 2023.

FINALLY PASSED AND APPROVED on this 19th day of January, 2023.

ATTEST:	**CITY OF LEANDER, TEXAS**
_____	_____
Dara Crabtree, City Secretary	Christine DeLisle, Mayor

Exhibit "A"

+/- 12.402 ACRES

BEING a 12.402 acre tract of land in Williamson County, Texas, situated in the Benjamin Owen Payn Survey, Abstract No. 508 in Williamson County, Texas, and being all of a called 12.396 acre tract of land conveyed to B Twisted, LLC, in Document No. 2020069304, of the Official Public Records of Williamson County, Texas.

Exhibit "B"

AGREEMENT REGARDING POST-ANNEXATION PROVISION OF SERVICES FOR PROPERTY TO BE ANNEXED INTO THE CITY OF LEANDER

[Insert executed Agreement]

AGENDA ITEM # 16

EXECUTIVE SUMMARY
01/19/2023

AGENDA SUBJECT:

Approval of Horizon Lake Phases 2 and 3 License Agreement, Case LA-22-0006, to allow for the installation and maintenance of landscaping and irrigation within portions of the right-of-way of Inlet Court and Horizon Park Boulevard, Leander, Williamson County, Texas; and authorize the City Manager to execute any and all necessary documents.

BACKGROUND:

License agreements are required when developers propose to place private improvements within the public right-of-way. This agreement grants the developer permission to install the improvements as well as provide conditions that describe the responsibility of maintaining and possible removal of improvements. In addition, the developer is required to indemnify the City against claims and liabilities, and carry insurance.

The developer of Horizon Park Phases 2 & 3, generally located west of Horizon Lake Phase 4 and southeast of the intersection of US 183 and South Street, is requesting a license agreement to install and maintain landscaping and irrigation within a portion of the right-of-way of Inlet Court and Horizon Park Boulevard.

APPLICANT/AGENT:

SEC Planning, LLC (Ben Debellis) on behalf of Taylor Morrison of Texas, Inc. (Michael Moyer)

RECOMMENDATION:

Staff recommends approval of the license agreement.

PRESENTER:

Robin M. Griffin, AICP, Executive Director of Development Services

---

Attachments

1. License Agreement
2. Location Exhibit
3. Letter of Intent

LICENSE AGREEMENT
FOR THE HORIZON LAKE PHASES 2 & 3

The City of Leander, a Texas home-rule municipal corporation and political subdivision of the State of Texas situated in Williamson and Travis Counties, Texas ("the City"), and Taylor Morrison of Texas, Inc., an incorporated company (the "Licensee"), enter into this License Agreement for the Horizon Lake Phase 2 & 3 Subdivision ("Agreement") on this the ____ day of _____, 20__, upon the terms and conditions set forth below.

I. **PURPOSE OF LICENSE AGREEMENT.** The City grants to Licensee permission to use the property, located within the right-of-way of Horizon Lake Boulevard and Inlet Court in the Horizon Lake Subdivision , Leander, Texas (the "Subdivision"), shown in Exhibit "A" attached hereto and incorporated herein for all purposes (the "licensed property"), for the following purposes only:

(1) the installation of landscaping;
(2) the installation of an irrigation system for the landscaping; and
(3) the repair, maintenance and replacement of the landscaping and irrigation system, within right-of-way of Horizon Lake Boulevard and Inlet Court shown on Exhibit "A" hereto. The landscaping and irrigation are sometimes collectively referred to herein as the "improvements".

The City makes this grant solely to the extent of its right, title and interest in the licensed property, without any express or implied warranties.

Licensee agrees that all construction installation and maintenance permitted by this Agreement shall be done in compliance with plans and specifications approved in writing by the City Engineer and all applicable City, County, State and/or Federal laws, ordinances, regulations and policies now existing or later adopted.

Any provision herein to the contrary notwithstanding, Licensee shall be liable for, and shall indemnify and hold the City harmless from all damages, causes of action, and claims arising out of or in connection with Licensee's installation, operation, maintenance or removal of the improvements permitted under this Agreement.

II. ANNUAL FEE. No annual fee shall be due in connection with this License Agreement.

III. CITY'S RIGHT TO LICENSED PROPERTY. This Agreement is expressly subject and subordinate to the present and future right of the City, its successors, assigns, lessees, grantees, and Licensee, to construct, install, establish, maintain, use, operate, and renew any public utilities facilities, franchised public utilities, rights-of-way, roadways, or streets on, beneath, or above the surface of the licensed property. The uses of the licensed property are subject to the City's right to interfere with or destroy Licensee's use of the licensed property, or any property or the improvements placed thereon or therein by Licensee, if such use or action is determined necessary by the City.

Notwithstanding any provision of this Agreement to the contrary, the City retains the right to enter upon the licensed property, at any time and without notice, and assuming no obligation to Licensee,

to remove any of the improvements or alterations thereof whenever such removal is deemed necessary for: (a) exercising the City's rights or duties with respect to the licensed property; (b) protecting persons or property; or (c) the public health or safety.

IV. INSURANCE. Licensee shall, at its sole expense, provide a commercial general liability insurance policy, written by a company acceptable to the city and licensed to do business in Texas, with a combined single limit of not less than $600,000.00, which coverage may be provided in the form of a rider and/or endorsement to a previously existing insurance policy. The City may require the Licensee to increase the combined single limit of such coverage from time to time in the discretion of the City. Such insurance coverage shall specifically name the City as an additional-insured. The insurance shall cover all perils arising from the activities of Licensee, its officers, employees, agents, or contractors, relative to this Agreement. Licensee shall be responsible for any deductibles stated in the policy. A true copy of each such policy shall be delivered to the City Manager of City on or before the Licensee's use or occupancy of the licensed property.

Licensee shall not cause any insurance to be canceled nor permit any insurance to lapse, All insurance certificates shall include a clause to the effect that the policy shall not be canceled, reduced, restricted or otherwise limited until forty-five (45) days after the City has received written notice as evidenced by a return receipt of registered or certified mail.

V. INDEMNIFICATION. Licensee shall indemnify, defend, and hold harmless the City and its officers, agents and employees against all claims, suits, demands, judgments, expenses, including attorney's fees, or other liability for personal injury, death, or damage to any person or property which arises from or is in any manner caused by the Licensee's construction, maintenance or use of the licensed property. This indemnification provision, however shall not apply to any claims, suits, damage, costs, losses, or expenses (i) for which the City shall have been compensated by insurance provided under Paragraph IV, above, or (ii) arising solely from the negligent or willful acts of the City; provided that for the purposes of the foregoing, the City's entering into this Agreement shall not be deemed to be a "negligent or willful act."

VI. CONDITIONS.

A. Licensee's Responsibilities. Licensee will be responsible for any and all damage to or relocation of existing facilities. Further, Licensee shall reimburse the City for all costs of replacing or repairing any property of the City, or of others, that is damaged by or on behalf of Licensee as a result of activities under this Agreement.

B. Maintenance. Licensee shall maintain the licensed property by keeping the area free of debris and litter. Removal of dead or dying plants shall also be handled by Licensee at its expense. Further, the City may require Licensee to take action to maintain the licensed property including, but not limited to, the removal of dead or dying vegetation. Such removal shall be completed within thirty (30) days following receipt of a written request from the City.

C. Removal or Modification. Licensee agrees that removal or modification of any of the improvements now existing or to be later placed on the licensed property shall be a Licensee's expense. Provided the City has given prior written approval of the plans and

specifications for the improvements, said removal or modification shall be at Licensee's sole discretion.

D. Default. In the event that Licensee fails to maintain the licensed property or otherwise comply with the terms or conditions as set forth herein, the City shall give Licensee written notice thereof, by registered or certified mail, return receipt requested, to the address set forth below. Licensee shall have thirty (30) days from the date of receipt of such notice to take action to remedy the failure complained of, and, if Licensee does not satisfactorily remedy the same within the thirty (30) day period, the City may perform the work or contract for the completion of the work. Licensee agrees to pay within thirty (30) days of written demand by the City, all reasonable costs expenses incurred by the City in completing the work.

Licensee Address	**City Address**
Taylor Morrison of Texas, Inc. Attn: Michael Slack, Vice President 9601 Amberglen Blvd., Ste 200 Austin, Texas 78729 Travis County	City of Leander Attn: City Manager P.O. Box 319 Leander, Texas 78641 Williamson County

VII. COMMENCEMENT AND TERMINATION BY ABANDONMENT. This Agreement shall begin with the effective date and continue thereafter for so long as the licensed property shall be used for the purposes set forth herein. If Licensee abandons the use of all or any part of the licensed property for the purposes set forth in this Agreement, this Agreement shall expire and terminate, as to the portion or portions abandoned, following thirty (30) days written notice by the City to the Licensee or by Licensee to the City. If all or a part of the licensed property is abandoned by Licensee, the City shall thereafter have the same complete title to the licensed property so abandoned as though this Agreement had never been made, and shall have the right to enter on the licensed property and terminate the rights of Licensee, its successors and assigns hereunder, to the abandoned part of the licensed property. All installations of Licensee on a portion of the licensed property that is abandoned shall be deemed property of the City unless removed with the consent of the City.

VIII. TERMINATION.

A. Termination by Licensee. This Agreement may be terminated by Licensee by delivering written notice of termination to the City not later than thirty (30) days before the effective date of termination. If Licensee terminates, then it shall remove all installations that it made from the licensed property within the thirty day notice period, at its sole cost and expense. Failure to do so shall constitute a breach of this Agreement.

B. Termination by City. Notwithstanding any other term, provision or conditions of this Agreement, subject only to prior written notification to Licensee or its successor-in-interest, this Agreement is revocable by the City if:

1. The improvements, or a portion of them, interfere with the City's right-of-way;

2. Use of the licensed property becomes necessary for a public purpose;

3. The improvements, or a portion of them, constitute a danger to the public which the City deems not be remediable by alteration, repair or maintenance;

4. Despite thirty (30) days written notice to Licensee, maintenance or alteration necessary to alleviate a danger to the public has not been made; or

5. Licensee fails to comply with the terms and conditions of this Agreement including, but not limited to the insurance requirements specified herein.

If Licensee abandons or fails to maintain the licensed property, and the City receives no substantive response within thirty (30) days following written notification to Licensee, then the City may remove and/or replace all of the improvements and collect from Licensee the City's actual expenses incurred in connection therewith.

IX. EMINENT DOMAIN. If eminent domain is exerted on the licensed property the City will, to the extent permitted by law, cooperate with Licensee to effect the removal of Licensee's affected installations and the improvements thereon, at Licensee's sole expense. Licensee shall be entitled to retain all monies paid by the condemning authority to Licensee for Licensee's installations taken, if any.

X. INTERPRETATION. This Agreement shall, in the event of any dispute over its intent, meaning or application, shall be interpreted fairly and reasonably, and neither more strongly for or against either party.

XI. APPLICATION OF LAW. This Agreement shall be governed by the laws of the state of Texas. If the final judgment of a court of competent jurisdiction invalidates any part of this Agreement, then the remaining parts shall be enforced, to the extent possible, consistent with the intent of the parties as evidenced by this Agreement.

XII. VENUE. Venue for all lawsuits concerning this Agreement will be in the Williamson County, Texas.

XIII. COVENANT RUNNING WITH LAND; WAIVER OF DEFAULT. This Agreement and all of the covenants herein shall run with the land; therefore, the conditions set forth herein shall inure to and bind each party's successors and assigns. Either party may waive any default of the other at any time by written instrument, without affecting or impairing any right arising from any subsequent or other default.

XIV. ASSIGNMENT. Licensee shall not assign, sublet or transfer its interest in this Agreement without the written consent of the City, which consent shall not be unreasonably withheld. Subject to the assignee's compliance with the insurance requirements set forth herein, if any, Licensee shall furnish to the City a copy of any such assignment or transfer of any of Licensee's rights in this Agreement, including the name, address, and contact person of the assignee, along with the date of assignment or transfer.

TERMS AND CONDITIONS ACCEPTED, this the ___ day of _____, 20__.

LICENSOR: CITY OF LEANDER, TEXAS

By: _____
Name: _____
Title: City Manager

LICENSEE: Taylor Morrison of Texas, Inc.

By: Michael Slack
Name: Michael Slack
Title: Vice President

THE STATE OF TEXAS §
COUNTY OF WILLIAMSON §

This instrument was acknowledged before me on this the _____ day of _____, 20___, by _____, City Manager for the City of Leander, Texas, on behalf of the City.

_____
Notary Public – State of Texas

THE STATE OF TEXAS §
COUNTY OF Travis **§**

This instrument was acknowledged before me on this the 20th day of December, 2022, by Michael Slack, Vice President of the Taylor Morrison of Texas, Inc., on behalf of said entity.

DIANE M DURAN
Notary ID #132015237
My Commission Expires
May 15, 2023

Notary Public – State of Texas

AFTER RECORDING RETURN TO:
City of Leander
Attn: City Secretary
P. O. Box 319
Leander, Texas 78646-0319

EXHIBIT "A"

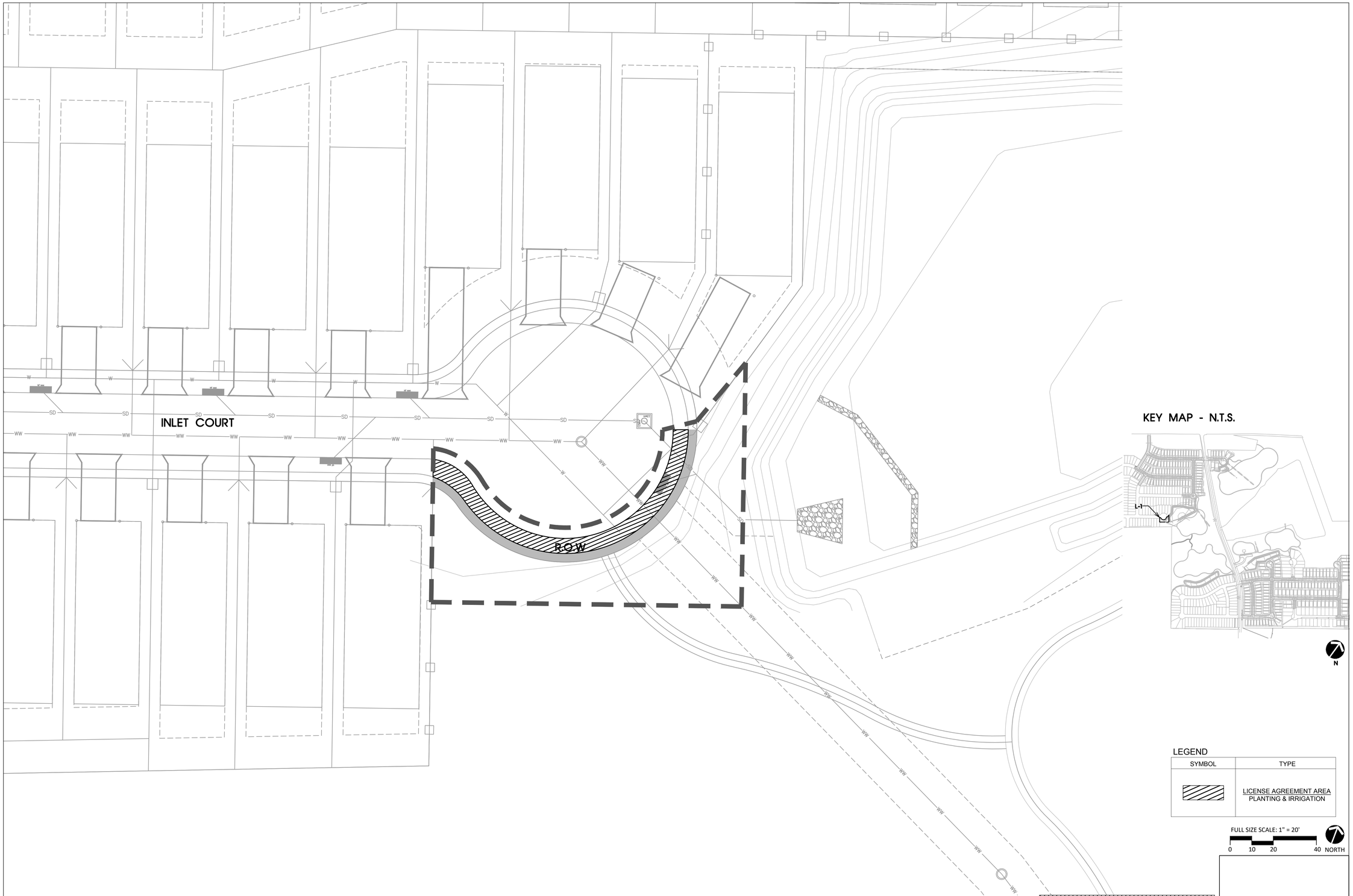

811 Know what's below. Call before you dig.

THE LOCATION OF EXISTING UNDERGROUND UTILITIES ARE SHOWN IN AN APPROXIMATE WAY ONLY. THE CONTRACTOR SHALL DETERMINE THE EXACT LOCATION OF ALL EXISTING UTILITIES BEFORE COMMENCING WORK. HE AGREES TO BE FULLY RESPONSIBLE FOR ANY AND ALL DAMAGES WHICH MIGHT BE OCCASIONED BY HIS FAILURE TO EXACTLY LOCATE AND PRESERVE ANY AND ALL UNDERGROUND UTILITIES.

CITY APPROVAL

SEC Planning, LLC

Austin, Texas

LAND PLANNING
LANDSCAPE ARCHITECTURE
COMMUNITY BRANDING

4201 W. Parmer Lane Bldg A Suite 220
Austin, TX 78727
T 512.246.7003

www.secplanning.com
Email : info@secplanning.com

PULTE HOMES
CENTRAL TEXAS
9401 AMBERGLEN BLVD
BLDG I, SUITE 150
AUSTIN, TEXAS 78729

REGISTERED LANDSCAPE ARCHITECT
AMANDA M. ONITAKARAH
3005
STATE OF TEXAS

09/08/2022

HORIZON LAKE
PH. 2 SEC. 1, PH. 3 SEC. 1
LICENSE AGREEMENT PLANS
LEANDER, TEXAS

Drawing File Name
S:\180145-PUTX\Cadfiles\LA\License Agreement\2022-08-30 Phase 2-1 LA\L-Base_Horizon Lake_License Agmt.dwg

Issued:
1. **City Submittal** **09/08/2022**
2.
3.
4.
5.

Revisions:
1.
2.
3.
4.
5.

Issue Date: 09/08/2022

Drawn By: JJ
Reviewed By: BD

Project No.
180145-PUTX

LICENSE AGREEMENT

Sheet No.
L-1 _____ of _____

The reproduction, copying or other use of this drawing without the written consent of SEC Planning, LLC is prohibited.

© 2022
SEC Planning, LLC

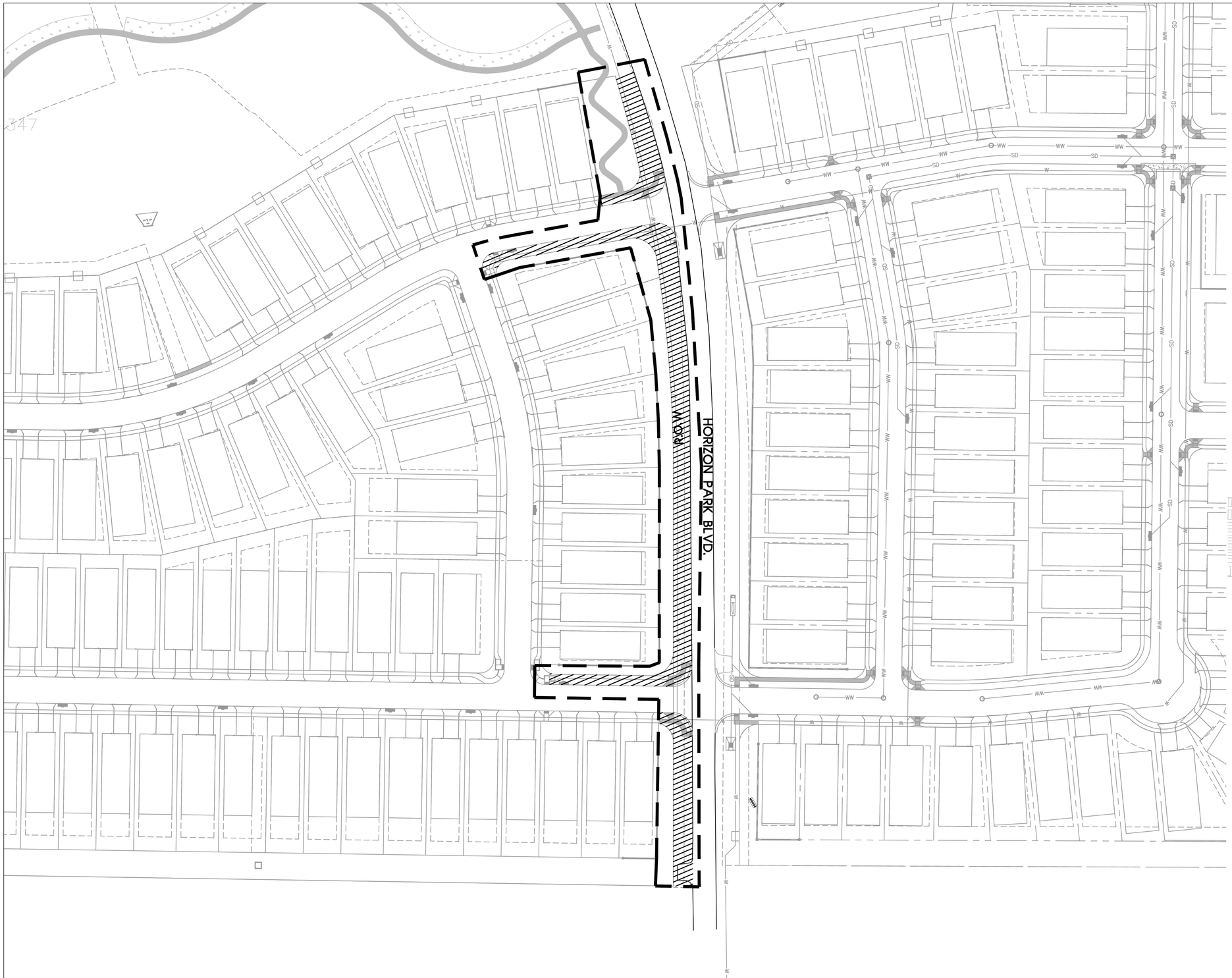

KEY MAP - N.T.S.

LEGEND

SYMBOL	TYPE
	LICENSE AGREEMENT AREA PLANTING & IRRIGATION

FULL SIZE SCALE: 1" = 50'

0 25 50 100 NORTH

811 Know what's below. Call before you dig.

THE LOCATION OF EXISTING UNDERGROUND UTILITIES ARE SHOWN IN AN APPROXIMATE WAY ONLY. THE CONTRACTOR SHALL DETERMINE THE EXACT LOCATION OF ALL EXISTING UTILITIES BEFORE COMMENCING WORK. HE AGREES TO BE FULLY RESPONSIBLE FOR ANY AND ALL DAMAGES WHICH MIGHT BE OCCASIONED BY HIS FAILURE TO EXACTLY LOCATE AND PRESERVE ANY AND ALL UNDERGROUND UTILITIES.

CITY APPROVAL

SEC Planning, LLC

Austin, Texas

LAND PLANNING
LANDSCAPE ARCHITECTURE
COMMUNITY BRANDING

4201 W. Parmer Lane Bldg A Suite 220
Austin, TX 78727
T 512.246.7003

www.secplanning.com
Email : info@secplanning.com

PULTE HOMES
CENTRAL TEXAS
9401 AMBERGLEN BLVD
BLDG I, SUITE 150
AUSTIN, TEXAS 78729

REGISTERED LANDSCAPE ARCHITECT
AMANDA M. ONITAKARN
3005
STATE OF TEXAS

09/08/2022

HORIZON LAKE
PH. 2 SEC. 1, PH. 3 SEC. 1
LICENSE AGREEMENT PLANS
LEANDER, TEXAS

Drawing File Name
S:\180145-PUTX\Cadfiles\LA\License Agreement\2022-09-09 Phase 3-1\L-Base_Horizon Lake_License Agmt3-1.dwg

Issued:
1. **City Submittal** **09/08/2022**
2.
3.
4.
5.

Revisions:
1.
2.
3.
4.
5.

Issue Date: 09/08/2022

Drawn By: JJ

Reviewed By: BD

Project No. 180145-PUTX

LICENSE AGREEMENT

Sheet No. L-2 _____ of _____

The reproduction, copying or other use of this drawing without the written consent of SEC Planning, LLC is prohibited.

© 2022
SEC Planning, LLC

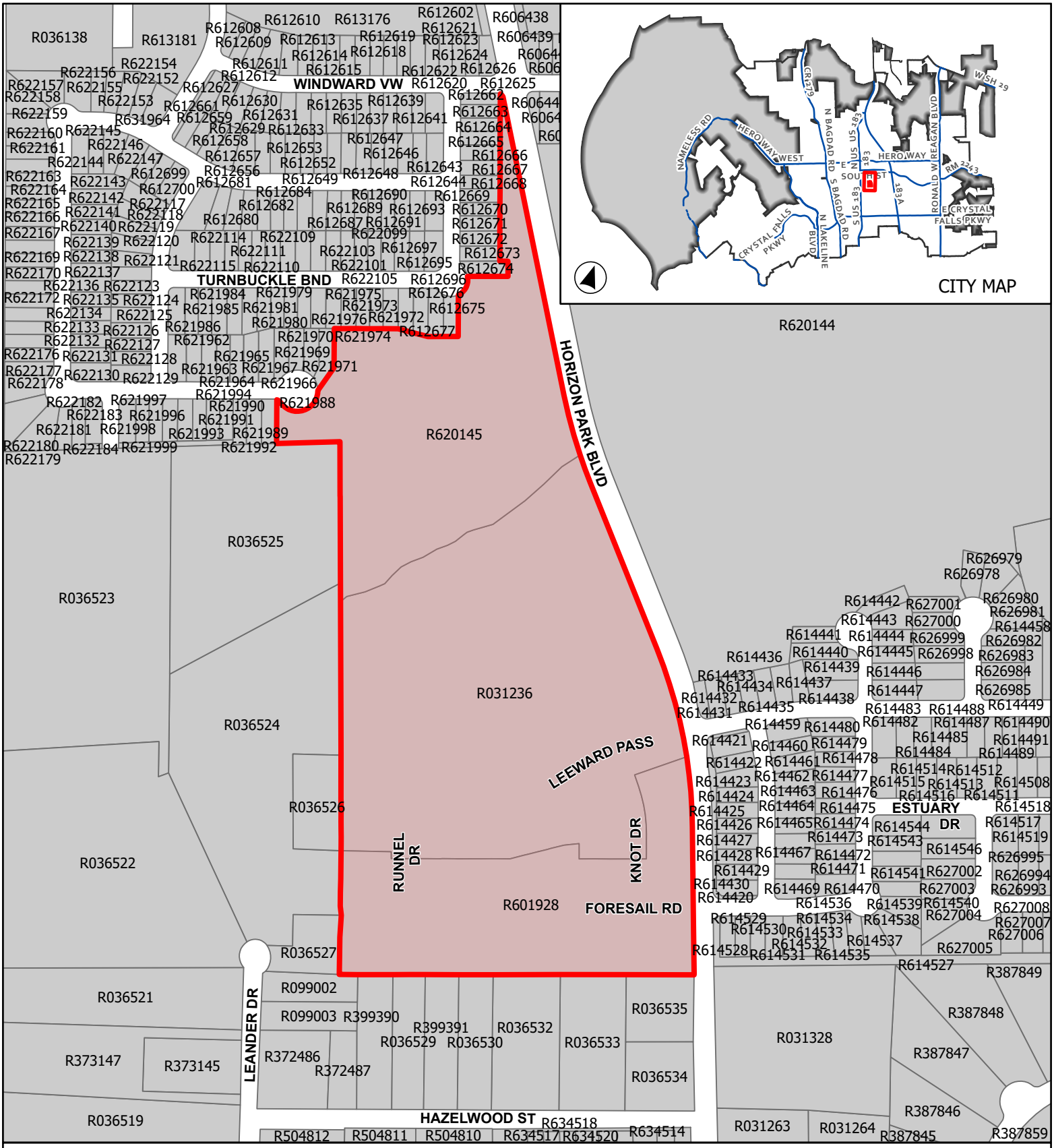

CASE: 22-LA-0006

EXHIBIT A

HORIZON LAKE PH 2 SEC 1, PH 3 SEC 1

Location Map

Site Location

Incorporated City

0 180 360

Feet

This map has been produced by the City of Leander for informational purposes only. No warranty is made by the City regarding completeness or accuracy. This data should not be construed as a legal description or survey instrument. No responsibility is assumed for damages or other liabilities due to the accuracy, availability, completeness, use or misuse of the information herin provided.

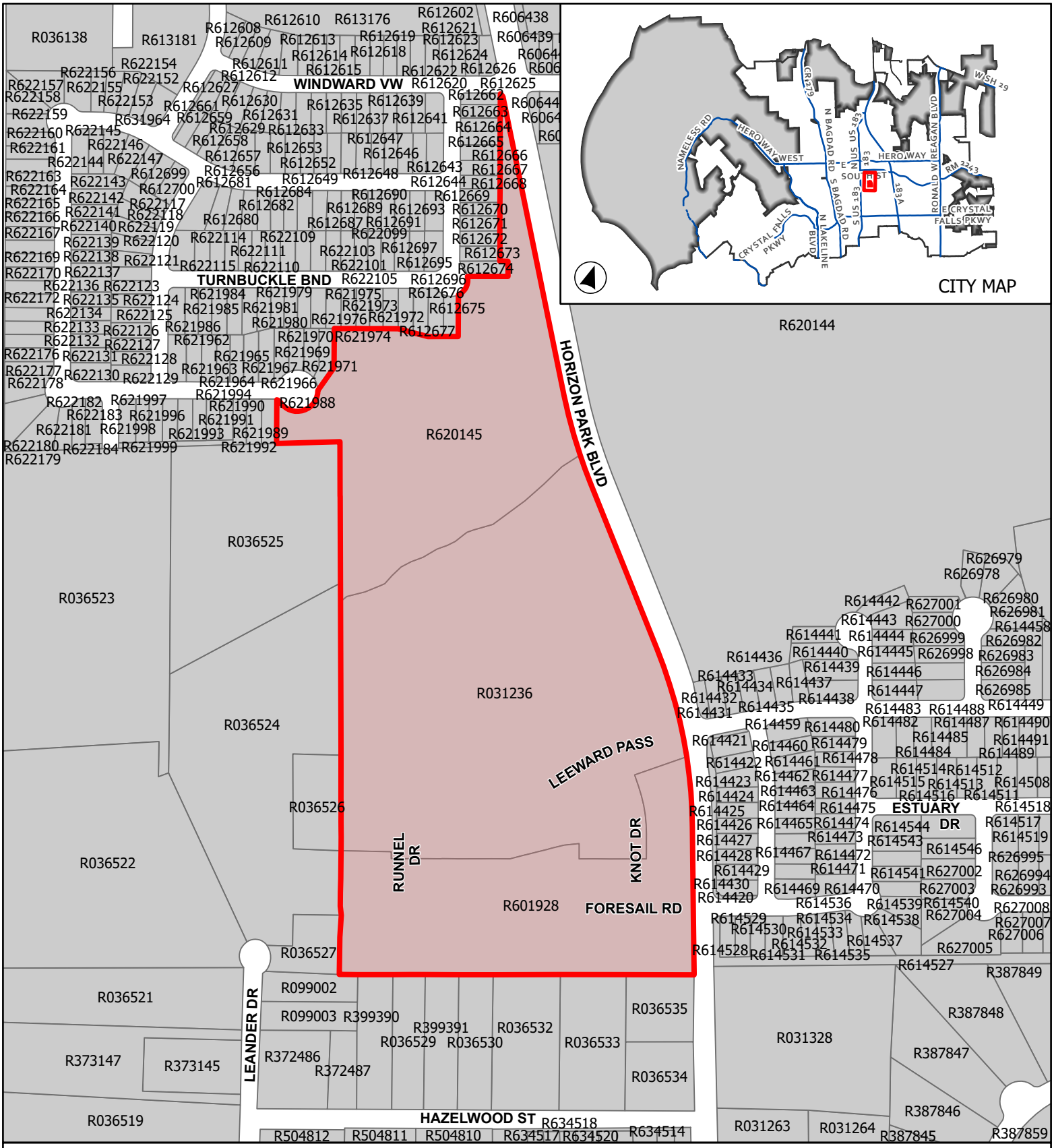

CASE: 22-LA-0006 **ATTACHMENT 2** **HORIZON LAKE PH 2 SEC 1, PH 3 SEC 1**

Location Map

Site Location

Incorporated City

0 180 360

Feet

This map has been produced by the City of Leander for informational purposes only. No warranty is made by the City regarding completeness or accuracy. This data should not be construed as a legal description or survey instrument. No responsibility is assumed for damages or other liabilities due to the accuracy, availability, completeness, use or misuse of the information herin provided.

SEC Planning, LLC
Land Planning + Landscape Architecture + Community Branding
CLIENT-CENTERED THINKING™

September 8, 2022

Robin Griffin
City of Leander Planning Department
201 N. Brushy Street
Leander, TX 78641

Re: Horizon Lake License Agreement Application

Dear Robin,

The purpose of this application is to apply for a License Agreement between the City of Leander at and Horizon Lake HOA, for landscape and irrigation placed in the ROW along Horizon Park Boulevard in Phase 3, Section 1 as well as at the cul-de-sac bulb on Inlet Court in Phase 2, Section 1 of the Horizon Lake Subdivision. The improvements in the ROW would consist of turf sod and spray irrigation as reflected in the approved subdivision plans permit numbers, 21-PICP-043 and 21-PICP-013.

Should you have any questions or need additional information, please do not hesitate to contact me.

Sincerely,

Amanda Ontrakarn

Amanda Ontrakarn, PLA

AGENDA ITEM # 17

EXECUTIVE SUMMARY
01/19/2023

AGENDA SUBJECT:

Approval of Development Agreement Case 22-DA-024 regarding the Prime Office Warehouse Development Agreement on one parcel of land approximately 8.34 acres ± in size, more particularly described by Williamson Central Appraisal District Parcel R031220; and commonly known as 15901 Ronald W. Reagan Boulevard, Leander, Williamson County, Texas.

BACKGROUND:

The purpose of this Development Agreement is to implement masonry standards associated with the project. This agreement will allow for the City to enforce the development standards set forth in the agreement through the building permit, inspection, and certificate of occupancy processes by this agreement, given that House Bill 2439 adopted in the 86th Legislative Session limits the ability of cities to enforce certain development standards governing building materials by ordinance.

This agreement requires that all structures are comprised of at least one hundred (100%) percent masonry. Masonry includes stone, brick, stucco, or factory tinted split faced concrete masonry unit.

APPLICANT/AGENT:

AR Reddy Spring Creek, LLC

PRESENTER:

Robin M. Griffin, AICP, Executive Director of Development Services

---

Attachments

1. Development Agreement

MASONRY DEVELOPMENT AGREEMENT
ESTABLISHING DEVELOPMENT STANDARDS
FOR THE PRIME OFFICE WAREHOUSE LEANDER

This Development Agreement Establishing Development Standards for the **Prime Office Warehouse Leander development** (the "Agreement") is made and entered into, effective as of the ____ day of _____, 20____, by and between the **City of Leander, Texas**, a Texas home rule municipal corporation (the "City"), and **AR Reddy Spring Creek, LLC** (the "Developer"). The City and the Developer are sometimes referred to herein as the "Parties." The Parties agree as follows.

Section 1. Purpose; Consideration.

(a) The Developer owns that certain 8.34 acre tract located in Williamson County, Texas, being more particularly described in **Exhibit A** attached hereto and incorporated herein for all purposes (the "Property") and wishes to develop the Property for Office/Warehouse Flex Space (the "Development"). The Developer desires that the City be able to enforce the development standards set forth herein through its building permit, inspection, and certificate of occupancy processes by this agreement, given that House Bill 2439 adopted in the 86th Legislative Session limits the ability of cities to enforce certain development standards governing building materials by ordinance.

(b) The Developer will benefit from the City enforcing the Development Standards as set forth herein because it will be more efficient and cost-effective for compliance to be monitored and enforced through the City's building permit and inspection processes and will help ensure that the Development is built out as planned by the Developer after conveyance to the builder of homes or other buildings and structures authorized by the applicable zoning regulations. The City will benefit from this Agreement by having assurance regarding certain development standards for the Development, having certainty that such Development Standards may be enforced by the City, and preservation of property values within the City.

(c) The benefits to the Parties set forth in this Article 1, plus the mutual promises expressed herein, are good and valuable consideration for this Agreement, the sufficiency of which is hereby acknowledged by both Parties.

Section 2. Term; Termination.

(a) The term of this Agreement shall be in full force and effect from the Effective Date hereof, subject to earlier termination as provided in this Agreement. Unless earlier terminated as provided in this Agreement, this Agreement shall terminate upon the issuance of the final certificate of occupancy for the final structure in the Development.

(b) The Parties further mutually agree that this Agreement shall be in full force and effect upon the date above first written, provided that the City may terminate this Agreement if Developer defaults under the terms of this Agreement, subject to the notice and cure provisions in Section 6.

Section 3. Development Standards.

(a) Development Requirements. The exterior wall standards set forth in this section shall apply to the structures located on the Property. At least one hundred percent (100%) of the combined exterior surface area of all walls, including all stories of buildings / structures, shall consist of stone, brick, painted or tinted stucco, or similar material approved by the Director of Planning.

(b) Building Permits. The Developer acknowledges and agrees that compliance with Section 3(a) will be a condition of issuance of building permits and certificates of occupancy. Developer further agrees that the City may use its building permitting, inspection, and enforcement processes and procedures to enforce the requirements of Section 3(a) above, including but not limited to rejection of applications and plans, stop work orders, and disapproval of inspections for applications and/or work that does not comply with this Agreement. Applications and plans for a building permit must demonstrate compliance with this Agreement in order for a building permit to be issued. Applications for building permits must be in compliance with this Agreement, as well as the Applicable Regulations, in order for such application to be approved and a building permit issued. Plans demonstrating compliance with this Agreement must accompany a building permit application and will become a part of the approved permit. Any structure constructed on the Property must comply with this Agreement and the Applicable Regulations for a certificate of occupancy to be issued for such structure.

Section 4. Development of the Property. Except as modified by this Agreement, the Development and the Property will be developed in accordance with all applicable local, state, and federal regulations, including but not limited to the City's ordinances and the zoning regulations applicable to the Property, and such amendments to City ordinances and regulations that that may be applied to the Development and the Property under Chapter 245, Texas Local Government Code, and good engineering practices (the "Applicable Regulations"). If there is a conflict between the Applicable Regulations and the Development Standards, the Development Standards shall control.

Section 5. Assignment of Commitments and Obligations; Covenant Running with the Land.

(a) Developer's rights and obligations under this Agreement may be assigned by Developer to one (1) or more purchasers of all or part of the Property; provided the City Council must first approve and consent to any such assignment by Developer of this Agreement or of any right or duty of Developer pursuant to this Agreement, which consent shall not be unreasonably withheld or delayed.

(b) This Agreement shall constitute a covenant that runs with the Property and is binding on future owners of the Property, and a copy of this Agreement shall be recorded in the Official Public Records of Williamson County, Texas. The Developer and the City acknowledge and agree that this Agreement is binding upon the City and the Developer and their respective successors, executors, heirs, and assigns, as applicable, for the term of this Agreement.

Section 6. Default. Notwithstanding anything herein to the contrary, no party shall be deemed to be in default hereunder until the passage of fourteen (14) business days after receipt by such party of notice of default from the other party. Upon the passage of fourteen (14) business days without cure of the default, such party shall be deemed to have defaulted for purposes of this Agreement; provided that if the nature of the default is that it cannot reasonably be cured within the fourteen (14) business day period, the defaulting party shall have a longer period of time as may be reasonably necessary to cure the default in question; but in no event more than sixty (60) days. In the event of default, the non-defaulting party to this Agreement may pursue the remedy of specific performance or other equitable legal remedy not inconsistent with this Agreement. All remedies will be cumulative and the pursuit of one authorized remedy will not constitute an election of remedies or a waiver of the right to pursue any other authorized remedy. In addition to the other remedies set forth herein, the City may withhold approval of a building permit application or a certificate of occupancy for a structure that does not comply with the Development Standards.

Section 7. Reservation of Rights. To the extent not inconsistent with this Agreement, each party reserves all rights, privileges, and immunities under applicable laws, and neither party waives any legal right or defense available under law or in equity.

Section 8. Attorneys Fees. In the event of action pursued in court to enforce rights under this Agreement, the prevailing party shall be entitled to its costs and expenses, including reasonable attorneys' fees, incurred in connection with such action.

Section 9. Waiver. Any failure by a party to insist upon strict performance by the other party of any provision of this Agreement will not, regardless of length of time during which that failure continues, be deemed a waiver of that party's right to insist upon strict compliance with all terms of this Agreement. In order to be effective as to a party, any waiver of default under this Agreement must be in writing, and a written waiver will only be effective as to the specific default and as to the specific period of time set forth in the written waiver. A written waiver will not constitute a waiver of any subsequent default, or of the right to require performance of the same or any other provision of this Agreement in the future.

Section 10. Force Majeure.

(a) The term "force majeure" as employed herein shall mean and refer to acts of God; strikes, lockouts, or other industrial disturbances: acts of public enemies, orders of any kind of the government of the United States, the State of Texas or any civil or military authority; insurrections; riots; epidemic; landslides; lightning, earthquakes; fires, hurricanes; storms, floods; washouts; droughts; arrests; restraint of government and people; civil disturbances; explosions; breakage or accidents to machinery, pipelines, or canals; or other causes not reasonably within the control of the party claiming such inability.

(b) If, by reason of force majeure, any party hereto shall be rendered wholly or partially unable to carry out its obligations under this Agreement, then such party shall give written notice of the full particulars of such force majeure to the other party within ten (10) days after the occurrence thereof. The obligations of the party giving such notice, to the extent effected by the force majeure, shall be suspended during the continuance of the inability claimed, except as hereinafter provided, but for no longer period, and the party shall endeavor to remove or

overcome such inability with all reasonable dispatch.

(c) It is understood and agreed that the settlement of strikes and lockouts shall be entirely within the discretion of the party having the difficulty, and that the above requirement that any Force Majeure shall be remedied with all reasonable dispatch shall not require that the settlement be unfavorable in the judgment of the party having the difficulty.

Section 11. Notices. Any notice to be given hereunder by any party to another party shall be in writing and may be effected by personal delivery or by sending said notices by registered or certified mail, return receipt requested, to the address set forth below. Notice shall be deemed given when deposited with the United States Postal Service with sufficient postage affixed.

Any notice mailed to the City shall be addressed:
City of Leander
Attn: City Manager
P.O. Box 319
Leander, Texas 78641
Williamson County

with copy to:
The Knight Law Firm, LLP
Attn: Paige H. Saenz, Partner
223 West Anderson Lane, Suite A-105
Austin, Texas 78752
Travis County

Any notice mailed to the Developer shall be addressed:
AR Reddy Spring Creek, LLC
Attn: Raju Padigala
6253 Corvara Court
Frisco, TX 75035
Collin County

Any party may change the address for notice to it by giving notice of such change in accordance with the provisions of this section.

Section 12. Waiver of Alternative Benefits. The Parties acknowledge the mutual promises and obligations of the Parties expressed herein are good, valuable and sufficient consideration for this Agreement. Therefore, save and except the right to enforce the obligations of the City to perform each and all of the City's duties and obligations under this Agreement, Developer hereby waives any and all claims or causes of action against the City Developer may have for or with respect to any duty or obligation undertaken by Developer pursuant to this Agreement, including any benefits that may have been otherwise available to Developer but for this Agreement.

Section 13. Severability. Should any court declare or determine that any provisions of this Agreement is invalid or unenforceable under present or future laws, that provision shall be fully

severable; this Agreement shall be construed and enforced as if the illegal, invalid, or unenforceable provision had never comprised a part of this Agreement and the remaining provisions of this Agreement shall remain in full force and effect and shall not be affected by the illegal, invalid, or unenforceable provision or by its severance from this Agreement. Furthermore, in place of each such illegal, invalid, or unenforceable provision, there shall be added automatically as a part of this Agreement a provision as similar in terms to such illegal, invalid, or unenforceable provision as may be possible and be legal, valid, and enforceable. Texas law shall govern the validity and interpretation of this Agreement.

Section 14. Agreement and Amendment. This Agreement, together with any exhibits attached hereto, constitutes the entire agreement between Parties and may not be amended except by a writing approved by the City Council of the City that is signed by all Parties and dated subsequent to the date hereof.

Section 15. No Joint Venture. The terms of this Agreement are not intended to and shall not be deemed to create any partnership or joint venture among the parties. The City, its past, present and future officers, elected officials, employees and agents, do not assume any responsibilities or liabilities to any third party in connection with the development of the Property. The City enters into this Agreement in the exercise of its public duties and authority to provide for development of property within the City pursuant to its police powers and for the benefit and protection of the public health, safety, and welfare.

Section 16. No Third Party Beneficiaries. This Agreement is not intended, nor will it be construed, to create any third-party beneficiary rights in any person or entity who is not a party, unless expressly provided otherwise herein, or in a written instrument executed by both the City and the third party. Absent a written agreement between the City and third party providing otherwise, if a default occurs with respect to an obligation of the City under this Agreement, any notice of default or action seeking a remedy for such default must be made by the Owner.

Section 17. Effective Date. The Effective Date of this Agreement is the defined date set forth in the first paragraph.

Section 18. Recordation. This Agreement or a memorandum of Agreement acceptable to the City and Developer shall be recorded in the Official Public Records of Williamson County, Texas.

Section 20. Texas Law Governs. This Agreement shall be governed by and construed in accordance with the laws of the State of Texas and shall be performable in Williamson County, Texas. Venue shall lie exclusively in Williamson County, Texas.

Section 21. Anti-Boycott Verification. To the extent this Agreement constitutes a contract for goods or services within the meaning of Section 2270.002 of the Texas Government Code, as amended, solely for purposes of compliance with Chapter 2270 of the Texas Government Code, and subject to applicable Federal law, the Developer represents that neither the Developer nor any wholly owned subsidiary, majority-owned subsidiary, parent company or affiliate of Developer (i) boycotts Israel or (ii) will boycott Israel through the term of this Agreement. The terms "boycotts Israel" and "boycott Israel" as used in this paragraph have the meanings assigned to the term

"boycott Israel" in Section 808.001 of the Texas Government Code, as amended.

Section 22. Iran, Sudan and Foreign Terrorist Organizations. To the extent this Agreement constitute a governmental contract within the meaning of Section 2252.151 of the Texas Government Code, as amended, solely for purposes of compliance with Chapter 2252 of the Texas Government Code, and except to the extent otherwise required by applicable federal law, Developer represents that Developer nor any wholly owned subsidiary, majority-owned subsidiary, parent company or affiliate of Developer is a company listed by the Texas Comptroller of Public Accounts under Sections 2270.0201, or 2252.153 of the Texas Government Code.

Section 23. Time is of the Essence. It is acknowledged and agreed by the Parties that time is of the essence in the performance of this Agreement.

Section 24. Exhibits. The following exhibits are attached to this Agreement, and made a part hereof for all purposes:

Exhibit A – Property Description & Sketch

EXECUTED in multiple originals this the _____ day of _____, 20___.

CITY:
City of Leander, Texas
a Texas home-rule municipal corporation

Attest:

By:_____
Name: Dara Crabtree
Title: City Secretary

By:_____
Name: Christine DeLisle
Title: Mayor

THE STATE OF TEXAS §
COUNTY OF _____ §

This instrument was acknowledged before me on this ____ day of _____, 20__, by _____, Mayor of the City of Leander, Texas, a Texas home-rule municipal corporation, on behalf of said corporation.

(SEAL)

_____
Notary Public, State of Texas

DEVELOPER:

By: _____
Name: Raju Padigala
Title: Owner

THE STATE OF TEXAS §
COUNTY OF Tarrant §

This instrument was acknowledged before me on this 5th day of December 2022, by Raju Padigala, owner of AR Reddy Spring Creek, a Limited Liability company, on behalf of said company.

(SEAL)

Haley Buesing
Notary Public, State of Texas

Haley Buesing
My Commission Expires
10/09/2024
ID No. 132720698

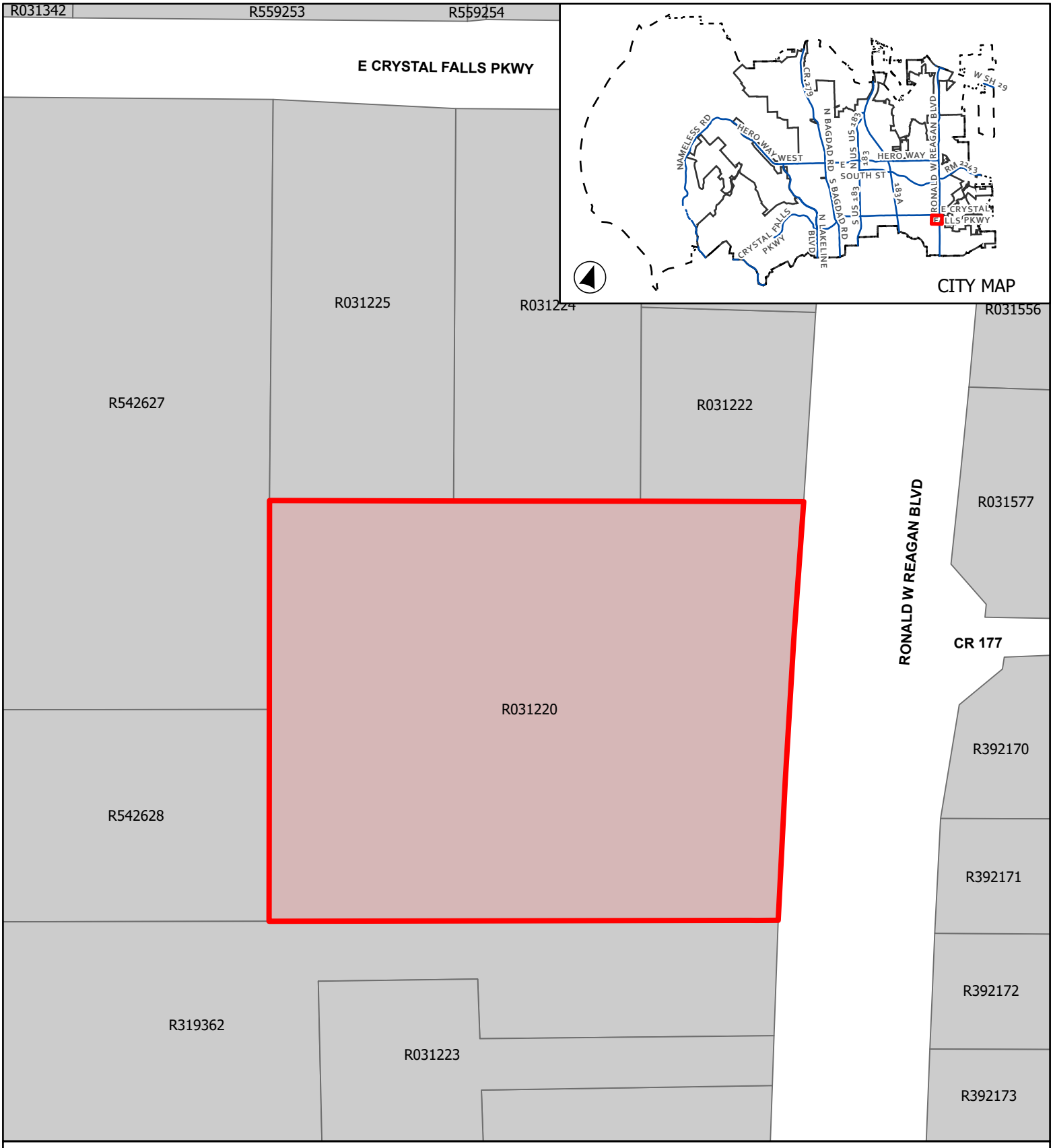

CASE: DA-22-0024 **EXHIBIT A** **PRIME OFFICE WAREHOUSE**

Location Map

This map has been produced by the City of Leander for informational purposes only. No warranty is made by the City regarding completeness or accuracy. This data should not be construed as a legal description or survey instrument. No responsibility is assumed for damages or other liabilities due to the accuracy, availability, completeness, use or misuse of the information herin provided.

0 75 150

Feet

City Limits

Subject Boundary

ETJ Boundary

AGENDA ITEM # 18

EXECUTIVE SUMMARY
01/19/2023

AGENDA SUBJECT:
Discuss and consider action on Tree Removal Case TRP-22-0007 regarding removal of Significant and Heritage Trees associated with the Pedernales Electric Cooperative Hero Way Substation Site Development Project located at 13151 Hero Way West, Leander, Williamson County, Texas.

BACKGROUND:
This request is the final step in the tree removal request process.

HISTORY/TIMELINE:
01/12/2023 - Planning & Zoning Commission

APPLICANT/AGENT:
CDS Muery (Jarod Cain.) on behalf of Pedernales Electric Cooperative, Inc (Cody Moos)

RECOMMENDATION:
The Planning & Zoning Commission unanimously approved the request during the January 12, 2023 meeting.

PRESENTER:
Robin M. Griffin, AICP, Executive Director of Development Services

Attachments

1. Planning Analysis
2. Location Map
3. Aerial Map
4. Letter of Intent
5. Tree Removal Exhibit
6. Tree Inventory

PLANNING ANALYSIS

TREE REMOVAL CASE TRP-22-0007
HERO WAY SUBSTATION (PEC)

GENERAL INFORMATION

Owner/Agent: CDS Muery (Jarod Cain.) on behalf of Pedernales Electric Cooperative, Inc (Cody Moos).

Current Zoning: **PEC Hero Way Substation PUD (**Planned Unit Development) PUD
Base zoning: GC-4-D (General Commercial)

Size and Location: The property is located at 13151 Hero Way West, approximately 4.93 acres in size.

Staff Contact: Cory Dale, Planner

APPLICANT REQUEST

The applicant has submitted a request to remove four significant trees (trees tags: 5047, 5174, 5206 and 5263) and four heritage trees (tree tags: 5143, 5145, 5172 and 5259) due to the construction of an electric substation and drives and accompanying detention facility. In addition, applicant cites challenges in layout flexibility due to the preservation and adherence to the 200 feet undisturbed natural area in rear of tract set in place during the rezone process (Case: 21-Z-014).

Per Composite Zoning Ordinance, Article VI, Section 1(c) removal of significant trees greater than eighteen (18") caliper inches requires the approval of the Planning and Zoning Commission or alternative tree preservation plan (where applicable undesirable or impractical conditions exist on site). The Planning & Zoning Commission shall also review all applications for Heritage Tree removal permits and make a recommendation for approval or denial to the City Council which shall have final authority to issue the permit.

SITE INFORMATION:

ABUTTING ZONING AND LAND USE:

	ZONING	LAND USE
NORTH	SFS-2-B	Undeveloped
EAST	GC-4-C Interim SFR-1-B	Canes Southwest Outdoor Facility
SOUTH	SFS-2-B	Residential
WEST	PUD (NR)	Neighborhood Residential

SURROUNDING AREA:
This property is located approximately 1,200 feet due east of the intersection of Hero Way West and Lakeline Blvd. The subject tract is bound to the south and west by residential uses (Westwood Section 3 and Urbana PUD respectively). The east-abutting tract is commercial in use and is an outdoor practice facility.

PHYSICAL AND NATURAL FEATURES:
Subject site contains no floodplain and heavy tree cover. During the PUD zoning process, a 200-foot natural area/no-build zone was established with heavy tree cover to buffer proposed use from rear residential subdivision.

MAJOR CORRIDORS:
This project will take access off Hero Way West.

CURRENT LAND USES:
The tract exists today as a homestead. Staff is currently reviewing a site plan submittal.

APPROVAL CRITERIA:

The Composite Zoning Ordinance includes the following tree mitigation requirements:

- Up to 50% of significant trees between eight (8") and eighteen (18") caliper inches may be removed without mitigation. The replacement ratio is 1:1.
- Trees 18 to 26 caliper inches may be removed with the approval of the Commission and a replacement ratio of 2:1.
- Heritage Trees (>26) require approval by the Commission and Council, a replacement ratio of 3:1, and a removal fee in the amount of $300 per caliper inch.

Below, please see the proposed tree removal proposal per the Hero Way Substation Site Development Plans (SD-22-0026):

TREE CALIPER INCHES					
TREE DESIGNATION	TOTAL INCHES	SAVED INCHES	SAVED INCHES %	REMOVED INCHES	REMOVED INCHES %
SIGNIFICANT (8"-18")	2660	1473	55%	1187	45%
SIGNIFICANT (19"-25")	242	178	74%	64	26%
SUBTOTAL (8"-25")	**2902**	**1651**	**57%**	**1251**	**43%**
HERITAGE (>26")	238	113	47%	125	53%
TOTALS	3140	1764	56%	1376	44%

TOTAL TREES					
TREE DESIGNATION	TOTAL TREES	SAVED TREES	SAVED TREES %	REMOVED TREES	REMOVED TREES %
SIGNIFICANT (8"-18")	242	134	55%	108	45%
SIGNIFICANT (19"-25")	11	8	73%	3	27%
SUBTOTAL (8"-25")	253	142	**56%**	111	**44%**
HERITAGE (>26")	8	4	50%	4	50%
TOTALS	261	146	56%	115	44%

MITIGATION PLAN					
TREE DESIGNATION (in caliper inches)	>50% REMOVAL	1:1 REPLACMENT	2:1 REPLACEMENT	3:1 REPLACEMENT	FEES
SIGNIFICANT (8"-18")	0	0			$0.00
SIGNIFICANT (19"-25")			128		$19,200.00
HERITAGE (>26")				375	$56,250.00
(125") HERITAGE TREE REMOVAL FEE ($300/INCH)					$37,500.00
*(30") UNDERSIZED TREE INCHES APPLIED TO MITIGATION (-$150/INCH)					($4,500.00)
*(143") OVERAGE PRESERVATION FROM SIGNIFICANT 8"-18" (-$150/INCH)					($21,450.00)
(12") REPLACEMENT TREE INCHES APPLIED TO MITIGATION (-$150/INCH)					($1,800.00)
TOTAL FEE AMOUNT					**$85,200.00**
* Existing trees used for mitigation credits shall not be applied to landscaping requirements. Trees used for mitigation credit are circled in blue on the tree removal plan.					

As part of the mitigation process, the Developer is proposing to pay the mitigation fees in the amount of $150 per caliper inch of replacement tree in lieu of planting new trees.

Mitigation Fees

- Significant Trees >18" – 26" removed: 64"
- Significant Trees >18" – 26" mitigation fees ($150 per caliper inch at 2:1): **$19,200**

- Heritage Tree (>26) removal fee ($300 per caliper inch removed): **$37,500**

- Heritage Trees >26" removed: 125"
- Heritage Trees >26" mitigation fees ($150 per caliper inch at 3:1): **$56,250**

- Significant trees 8" to 18" on-site preservation (blue trees on Attachment 5) at 143 caliper inches: (**$21,450**)
- Trees 2" to 8" kept for tree credit at 30 caliper inches: (**$4,500**)
- Replacement tree inches (in excess of landscaping) applied to mitigation at 12 caliper inches: **($1,800)**

Total Mitigation Fee: $85,200

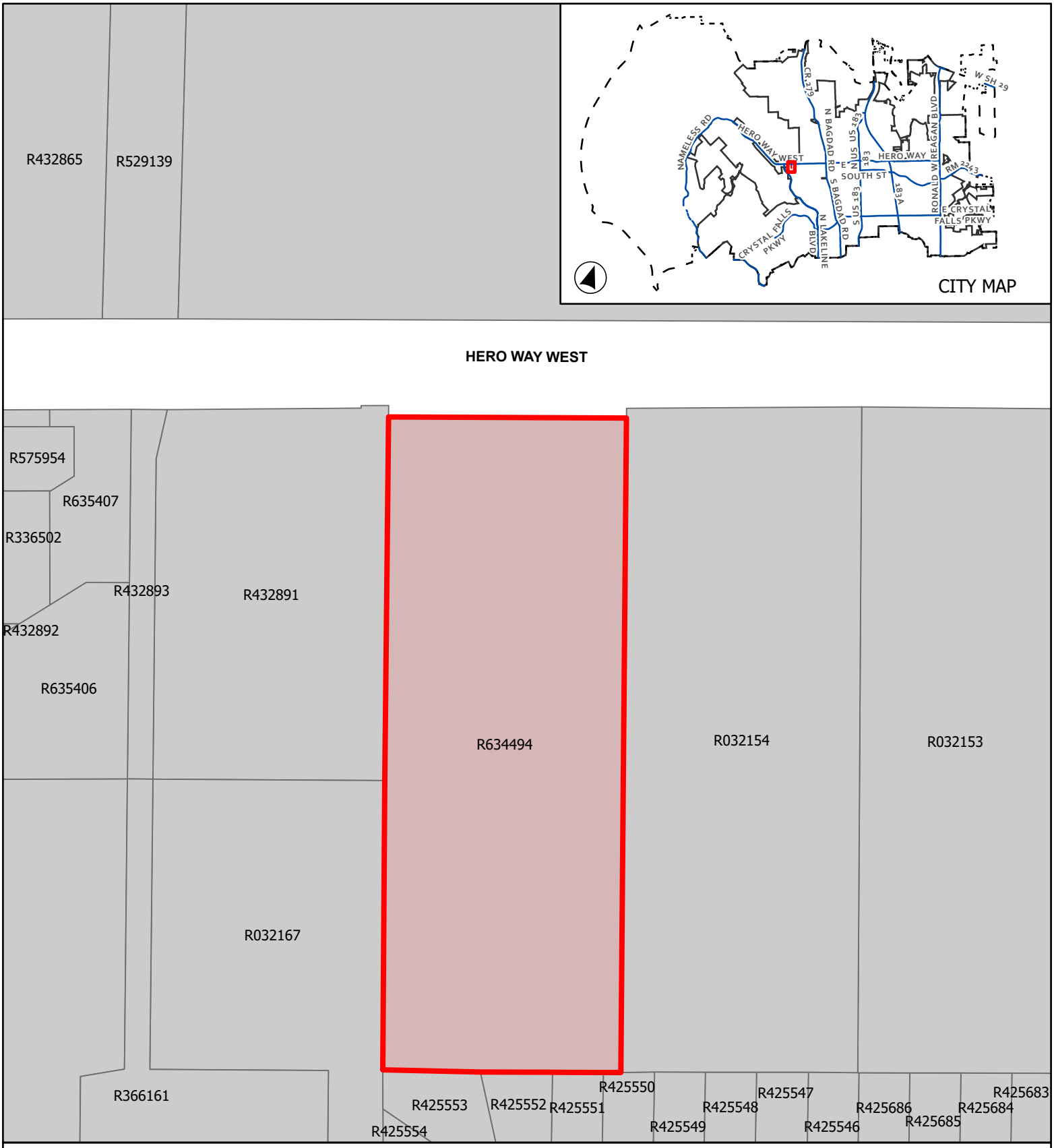

CASE: TRP-22-0007 **ATTACHMENT 2** **HERO WAY SUBSTATION**

Location Exhibit

This map has been produced by the City of Leander for informational purposes only. No warranty is made by the City regarding completeness or accuracy. This data should not be construed as a legal description or survey instrument. No responsibility is assumed for damages or other liabilities due to the accuracy, availability, completeness, use or misuse of the information herin provided.

0 70 140

Feet

City Limits

Subject Boundary

ETJ Boundary

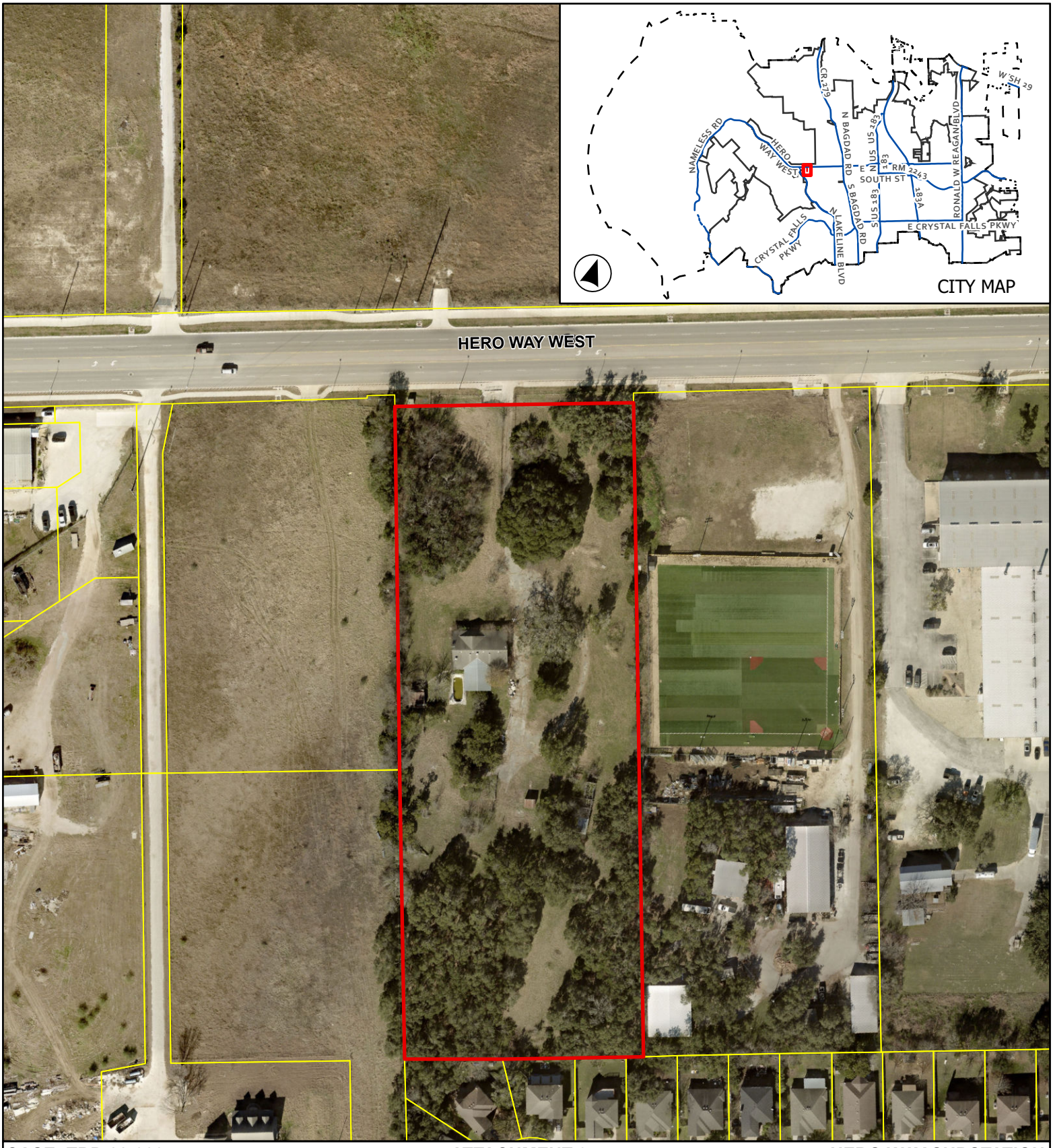

CASE: TRP-22-0007 **ATTACHMENT 3** **HERO WAY SUBSTATION**

Aerial Exhibit

This map has been produced by the City of Leander for informational purposes only. No warranty is made by the City regarding completeness or accuracy. This data should not be construed as a legal description or survey instrument. No responsibility is assumed for damages or other liabilities due to the accuracy, availability, completeness, use or misuse of the information herin provided.

0 65 130

Feet

Leander City Limits

Subject Boundary

August 29, 2022

City of Leander
Planning Department
PO Box 319
Leander, TX 78646

RE: Pedernales Electric Cooperative – 5.01 Acre Tract - Hero Way Substation Development
Tree Preservation and Mitigation – Letter of Intent

Dear Planning Department:

This letter describes the project approach to tree preservation and mitigation associated with the development of the above referenced property. The property is located within the City of Leander on the southeast side of FM 2243 (Hero Way West), approximately 1,200 feet northeast of the intersection with Lakeline Boulevard. The 5.01-acre tract was purchased by Pedernales Electric Cooperative (PEC) in March of 2020 to be developed as an electric substation to meet growing power demands in the Leander area. The property was re-zoned (Case 21–Z–009 and Ordinance NO. 21–042-00) in June of 2021 to General Commercial (GC-4-D).

With the re-zoning process, the back (south) 200 feet (approximately 1.3 acres) abutting residential development was to be set aside as undisturbed natural area with any new development. With this significant set aside, the proposed substation development has little flexibility towards tree preservation or mitigation planting. The proposed development includes construction of a substation pad (389.81 feet by 263.42 feet), two access drives, station fences, and a stormwater detention facility. Also, electric substations are typically surrounded by power lines that conflict with large trees.

Based on these limitations, tree removal is unavoidable. The trees in conflict with site surface improvements or significant grade changes are scheduled to be removed, see attached Sheet 6 – Demolition Plan, Sheet 15 – Grading and Drainage Plan, and Sheet 36 – Tree Preservation Plan. A schedule of tree removal is provided on Sheet 37 – Tree Inventory. Some trees within the developed area have been preserved and are indicated on the Tree Preservation Plan and Tree Inventory. On this project, only minimal tree mitigation can be provided because of the lack of space and conflicts with the primary function of the facility. Tree mitigation planting is reflected on Sheet 38 – Landscape Plan. The remaining mitigation requirements will be met by providing payment of a fee-in-lieu-of. A calculation of the remaining required mitigation is presented in the Fee Calculation Table at the bottom of the Tree Inventory – Sheet 37.

We hope this letter adequately explains our approach to complying with the City's tree preservation requirements given specific project objectives and limited space available. We look forward to your review and comments.

Respectfully:

Kenneth Rothe, P.E.
Director, CDS Muery

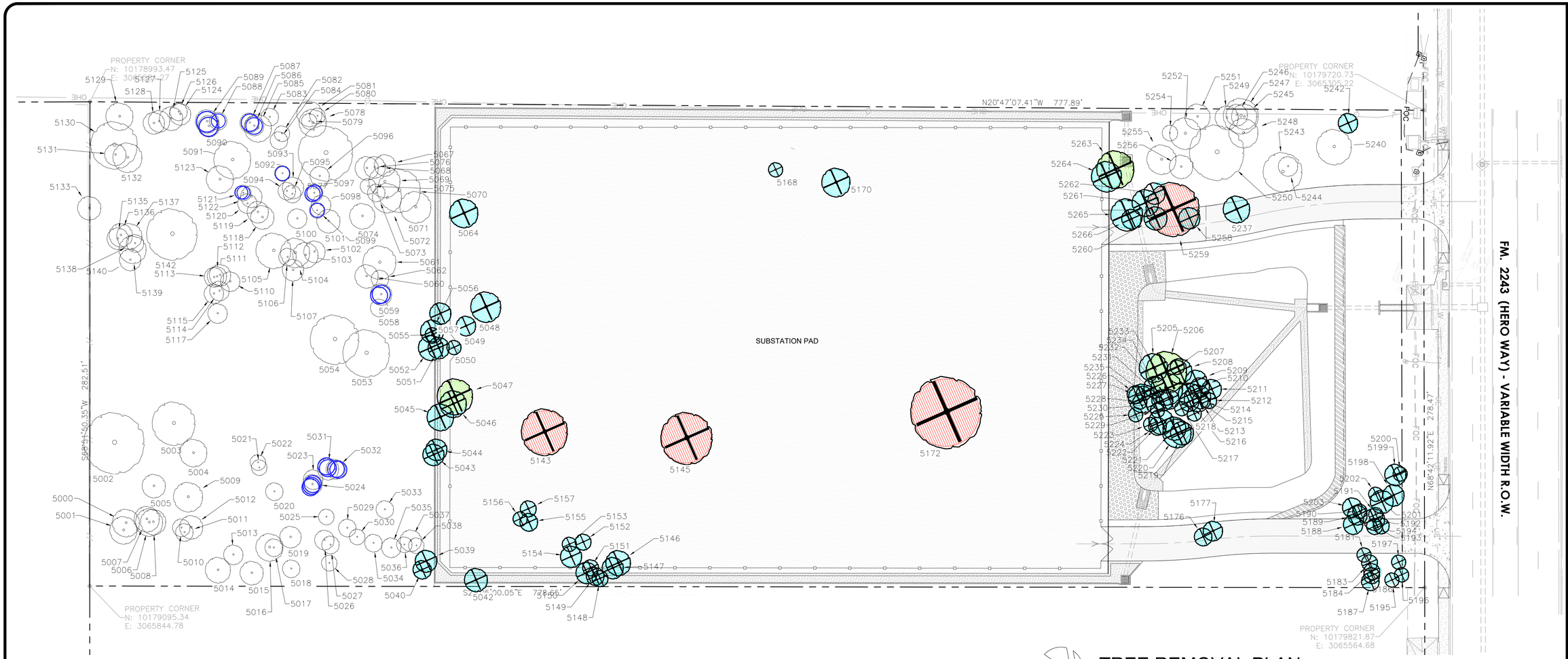

TREE PROTECTION GENERAL NOTES

1. TREE PROTECTION TO BE ERECTED AROUND ALL PROTECTED SIZE TREES TO BE AFFECTED BY CONSTRUCTION ACTIVITY.
2. ALL TREES SHALL REMAIN UNLESS NOTED ON THE CITY APPROVED PLANS.
3. NO SITE PREPARATION WORK SHALL BEGIN IN AREAS WHERE TREE PRESERVATION AND PROTECTION MEASURES HAVE NOT BEEN COMPLETED AND APPROVED BY THE CITY INSPECTOR.
4. TREE PROTECTION FENCING SHALL BE MAINTAINED AND REPAIRED BY THE CONTRACTOR DURING SITE CONSTRUCTION.
5. THE CONTRACTOR SHALL AVOID CUTTING ROOTS LARGER THAN THREE INCHES (3") IN DIAMETER WHEN EXCAVATING NEAR EXISTING TREES. EXCAVATION IN THE VICINITY OF TREES SHALL PROCEED WITH CAUTION. THE CONTRACTOR SHALL CONTACT LANDSCAPE ARCHITECT IF ROOTS LARGER THAN THREE INCHES (3") WITHIN THE FIVE FOOT (5') ROOT PROTECTION ZONE NEED TO BE PRUNED. ALL ROOTS LARGER THAN ONE INCH (1") IN DIAMETER SHALL BE CLEANLY CUT BY HAND WITH BYPASS TYPE PRUNING SHEARS.
6. THE CRITICAL ROOT PROTECTION ZONE (CRZ OR RPZ) IS THAT AREA SURROUNDING A TREE, AS MEASURED BY A RADIUS FROM THE TREE TRUNK, IN WHICH NO EQUIPMENT, VEHICLES OR MATERIALS MAY BE OPERATED OR BE STORED. THE REQUIRED RADIUS LENGTH IS ONE FOOT (1') PER DIAMETER INCH OF THE TREE. FOR EXAMPLE. A TEN INCH (10") DIAMETER TREE WOULD HAVE A TEN FOOT (10') RADIUS ROOT PROTECTION ZONE AROUND THE TREE. ROOTS OR BRANCHES THAT ARE IN CONFLICT WITH THE CONSTRUCTION SHALL BE CUT CLEANLY ACCORDING TO PROPER PRUNING METHODS. ALL OAK WOUNDS SHALL BE PAINTED OVER WITH AN ASPHALTIC TREE WOUND SEALER, WITHIN TWENTY (20) MINUTES TO PREVENT OAK WILT.
7. NO DISTURBANCE SHALL OCCUR CLOSER TO THE TRUNK THAN HALF THE ROOT PROTECTION ZONE AREA.
8. TREES, SHRUBS, OR BUSHES TO BE CLEARED FROM PROTECTED ROOT ZONE AREAS SHALL BE REMOVED BY HAND.
9. TREES DAMAGED OR LOST DUE TO CONTRACTOR'S NEGLIGENCE DURING CONSTRUCTION SHALL BE MITIGATED PER THE CURRENT CITY OF LEANDER TREE REPLACEMENT AND MITIGATION REQUIREMENTS.
10. EXPOSED ROOTS SHALL BE COVERED AT THE END OF EACH DAY USING TECHNIQUES SUCH AS COVERING WITH SOIL, MULCH, OR WET BURLAP.
11. ANY TREE REMOVAL SHALL BE APPROVED BY THE CITY ARBORIST OR PLANNING OFFICE PRIOR TO ITS REMOVAL.
12. ALL EXISTING TREES ARE TO BE MAINTAINED IN GOOD HEALTH THROUGHOUT THE DURATION OF CONSTRUCTION. CONTRACTOR IS TO ESTABLISH A DAILY OR AS NEEDED WATERING ROUTINE FOR ALL EXISTING TREES IMPACTED BY CONSTRUCTION. PROVIDE ONE APPLICATION OF ROOT STIMULATOR TO EXISTING TREES PRIOR TO START OF WORK.
13. THE PROPOSED FINISHED GRADE WITHIN THE ROOT PROTECTION ZONE OF ANY TREE TO BE PRESERVED SHALL NOT BE RAISED OR LOWERED MORE THAN THREE INCHES (3").
14. WHERE TREE FENCING WILL CONFLICT WITH NECESSARY CONSTRUCTION ACTIVITY THE FENCING SHALL BE ADJUSTED AND A 6" COARSE LAYER OF MULCH SHALL BE INSTALLED AND MAINTAINED OVER TREE ROOT PROTECTION ZONE. WHERE FENCING WILL ENCROACH WITHIN FIVE FEET (5') OF EXISTING TREE, TREE-ARMOR IS TO BE INSTALLED.
15. PRUNE & SHAPE TREES TO ESTABLISH MIN. CLEAR DISTANCE OF 5'-0" FROM ANY PART OF NEW STRUCTURE. PRUNE UNIFORMLY AROUND TREE TO MAINTAIN A BALANCED SHAPE. PROVIDE 14' CLEAR HEIGHT OVER DRIVES AND 8' CLEAR HEIGHT OVER LANDSCAPE AREAS.

NOTE: THE EXISTING TREE INFORMATION SHOWN ON THIS PLAN (LOCATION, SIZE & SPECIES) IS FROM A PLAN PROVIDED BY THE OWNER OR BY A CIVIL ENGINEERING COMPANY HIRED BY THE OWNER. CONTRACTOR SHALL VERIFY EXISTING TREE LOCATIONS.

TREE CALIPER INCHES

TREE DESIGNATION	TOTAL INCHES	SAVED INCHES	SAVED INCHES %	REMOVED INCHES	REMOVED INCHES %
SIGNIFICANT (8"-18")	2660	1473	55%	1187	45%
SIGNIFICANT (19"-25")	242	178	74%	64	26%
SUBTOTAL (8"-25")	**2902**	**1651**	**57%**	**1251**	**43%**
HERITAGE (>26")	238	113	47%	125	53%
TOTALS	3140	1764	56%	1376	44%

TOTAL TREES

TREE DESIGNATION	TOTAL TREES	SAVED TREES	SAVED TREES %	REMOVED TREES	REMOVED TREES %
SIGNIFICANT (8"-18")	242	134	55%	108	45%
SIGNIFICANT (19"-25")	11	8	73%	3	27%
SUBTOTAL (8"-25")	253	142	**56%**	111	**44%**
HERITAGE (>26")	8	4	50%	4	50%
TOTALS	261	146	56%	115	44%

MITIGATION PLAN

TREE DESIGNATION (in caliper inches)	>50% REMOVAL	1:1 REPLACMENT	2:1 REPLACEMENT	3:1 REPLACEMENT	FEES
SIGNIFICANT (8"-18")	0	0			$0.00
SIGNIFICANT (19"-25")			128		$19,200.00
HERITAGE (>26")				375	$56,250.00
(125") HERITAGE TREE REMOVAL FEE ($300/INCH)					$37,500.00
*(30") UNDERSIZED TREE INCHES APPLIED TO MITIGATION (-$150/INCH)					($4,500.00)
*(143") OVERAGE PRESERVATION FROM SIGNIFICANT 8"-18" (-$150/INCH)					($21,450.00)
(12") REPLACEMENT TREE INCHES APPLIED TO MITIGATION (-$150/INCH)					($1,800.00)
TOTAL FEE AMOUNT					**$85,200.00**

* Existing trees used for mitigation credits shall not be applied to landscaping requirements.
Trees used for mitigation credit are circled in blue on the tree removal plan.

LANDSCAPE CREDIT INCHES AVAILABLE
1330" = 1330" @ 1:1 (SIGNIFICANT 8-18") LESS INCHES APPLIED TO MITIGATION
582" = 291" @ 2:1 (SIGNIFICANT >18" & HERITAGE) LESS INCHES APPLIED TO MITIGATION
*1912" = TOTAL LANDSCAPE CREDIT INCHES AVAILABLE

**TOTAL LANDSCAPE CREDIT INCHES EXCLUDE ALL TREE CREDIT INCHES APPLIED TO MITIGATION.*

N

TREE REMOVAL PLAN

0 30 60 90 feet
1" = 30'

LEGEND

- EXISTING TREE TO REMAIN
- TREE CREDITED TOWARD MITIGATION
- 'SIGNIFICANT' (8"-18") TREE TO BE REMOVED
- 'SIGNIFICANT' (19"-25") TREE TO BE REMOVED
- 'HERITAGE' TREE TO BE REMOVED
- PROPERTY LINE

1. UNDESIRABLE AND INVASIVE TREES ARE NOT DEPICTED ON THE TREE REMOVAL PLAN AND ARE NOT INCLUDED WITHIN THE TREE INVENTORY.
2. REFER TO THE TREE INVENTORY SHEET FOR A LISTING OF ALL PROTECTED TREES DEPICTED ON THE TREE REMOVAL PLAN SHEET.
3. EXISTING TREES INDICATED TO BE USED FOR MITIGATION CREDITS SHALL NOT BE APPLIED TO LANDSCAPING REQUIREMENTS.

COOPER LOCHTE
LANDSCAPE ARCHITECTURE LLC
12770 CIMARRON PATH, SUITE 100, SAN ANTONIO, TEXAS 78249 / TEL (210)821-6570

CLLA JOB #22-057

NO.	DATE	REVISIONS	BY
3	01/05/2023	CITY COMMENTS	
2	12/5/2022	CITY COMMENTS	
1	10/21/2022	CITY COMMENTS	JL

CDS muery
ENGINEERS | SURVEYORS
8745 CONFERENCE PLACE, SUITE 200 SAN ANTONIO, TEXAS 78230
210.545.1122 TBPE F-2580 TBPLS 10046300

DESIGN BY: CLLA	3	DATE: 10/27/2022	
DRAWN BY: CLLA	2	APPROVED BY: JL	
CHECKED BY: CLLA	1	CLLA JOB NO.: 22-057	
REVIEWED BY: JL			

TREE REMOVAL PLAN

HERO WAY SUBSTATION
SITE DEVELOPMENT PLANS
13151 HERO WAY WEST, LEANDER, TEXAS

REGISTERED LANDSCAPE ARCHITECT
JASON S. LOCHTE
2518
STATE OF TEXAS
1/5/2023

SHEET
1 of 3

22-SD-XXX

Point No.	Tree Size (")	Tree Description	Remain (")	Remove (")	Tree Designation
5002	31"	OAK	31		HERITAGE
5077	28"	OAK	28		HERITAGE
5142	26"	OAK	26		HERITAGE
5143	26"	OAK		26	HERITAGE
5145	29"	OAK		29	HERITAGE
5172	40"	OAK		40	HERITAGE
5250	28"	OAK	28		HERITAGE
5259	30"	OAK		30	HERITAGE
5003	22"	OAK	22		SIGNIFICANT (19"-25")
5047.01	20"	OAK		20	SIGNIFICANT (19"-25")
5053	24"	OAK	24		SIGNIFICANT (19"-25")
5054	25"	OAK	25		SIGNIFICANT (19"-25")
5070	22"	OAK	22		SIGNIFICANT (19"-25")
5091	19"	OAK	19		SIGNIFICANT (19"-25")
5130	24"	OAK	24		SIGNIFICANT (19"-25")
5206	23"	OAK		23	SIGNIFICANT (19"-25")
5243	20"	OAK	20		SIGNIFICANT (19"-25")
5252	22"	OAK	22		SIGNIFICANT (19"-25")
5263	21"	OAK		21	SIGNIFICANT (19"-25")
5000	14"	OAK	14		SIGNIFICANT (8"-18")
5001	14"	OAK	14		SIGNIFICANT (8"-18")
5004.01	14"	OAK	14		SIGNIFICANT (8"-18")
5004.02	11"	OAK	11		SIGNIFICANT (8"-18")
5005	12"	OAK	12		SIGNIFICANT (8"-18")
5006	14"	OAK	14		SIGNIFICANT (8"-18")
5007	13"	OAK	13		SIGNIFICANT (8"-18")
5008	13"	OAK	13		SIGNIFICANT (8"-18")
5009	15"	ARIZONA ASH	15		SIGNIFICANT (8"-18")
5010	9"	OAK	9		SIGNIFICANT (8"-18")
5011.01	9"	OAK	9		SIGNIFICANT (8"-18")
5011.02	11"	OAK	11		SIGNIFICANT (8"-18")
5012	12"	OAK	12		SIGNIFICANT (8"-18")
5013	10"	OAK	10		SIGNIFICANT (8"-18")
5014	13"	OAK	13		SIGNIFICANT (8"-18")
5015.01	12"	OAK	12		SIGNIFICANT (8"-18")
5015.02	9"	OAK	9		SIGNIFICANT (8"-18")
5016.01	14"	OAK	14		SIGNIFICANT (8"-18")
5016.02	10"	OAK	10		SIGNIFICANT (8"-18")
5017	9"	OAK	9		SIGNIFICANT (8"-18")
5018	9"	OAK	9		SIGNIFICANT (8"-18")
5019	11"	OAK	11		SIGNIFICANT (8"-18")
5020	9"	OAK	9		SIGNIFICANT (8"-18")
5021	8"	OAK	8		SIGNIFICANT (8"-18")
5022	8"	OAK	8		SIGNIFICANT (8"-18")
5023	10"	OAK	10		SIGNIFICANT (8"-18")
5024.01	10"	OAK	10		SIGNIFICANT (8"-18")
5024.02	8"	OAK	8		SIGNIFICANT (8"-18")
5025	8"	OAK	8		SIGNIFICANT (8"-18")
5026	10"	OAK	10		SIGNIFICANT (8"-18")
5027	9"	OAK	9		SIGNIFICANT (8"-18")
5028	8"	OAK	8		SIGNIFICANT (8"-18")
5029	9"	OAK	9		SIGNIFICANT (8"-18")
5030	8"	OAK	8		SIGNIFICANT (8"-18")
5031.01	11"	OAK	11		SIGNIFICANT (8"-18")
5031.02	8"	OAK	8		SIGNIFICANT (8"-18")
5032.01	10"	OAK	10		SIGNIFICANT (8"-18")
5033	9"	OAK	9		SIGNIFICANT (8"-18")
5034	9"	OAK	9		SIGNIFICANT (8"-18")
5035	10"	OAK	10		SIGNIFICANT (8"-18")
5036	8"	OAK	8		SIGNIFICANT (8"-18")
5037	11"	OAK	11		SIGNIFICANT (8"-18")
5038	8"	OAK	8		SIGNIFICANT (8"-18")
5039	11"	OAK		11	SIGNIFICANT (8"-18")
5040	9"	OAK		9	SIGNIFICANT (8"-18")
5042.01	13"	OAK		13	SIGNIFICANT (8"-18")
5042.02	9"	OAK		9	SIGNIFICANT (8"-18")
5043	12"	OAK		12	SIGNIFICANT (8"-18")
5044	12"	OAK		12	SIGNIFICANT (8"-18")
5045.01	15"	OAK		15	SIGNIFICANT (8"-18")
5045.02	14"	OAK		14	SIGNIFICANT (8"-18")
5046	15"	OAK		15	SIGNIFICANT (8"-18")
5048	17"	OAK		17	SIGNIFICANT (8"-18")
5049	11"	OAK		11	SIGNIFICANT (8"-18")
5050	8"	OAK		8	SIGNIFICANT (8"-18")
5051	12"	OAK		12	SIGNIFICANT (8"-18")
5052	14"	OAK		14	SIGNIFICANT (8"-18")
5055	8"	OAK		8	SIGNIFICANT (8"-18")
5056	13"	OAK		13	SIGNIFICANT (8"-18")
5057	12"	OAK		12	SIGNIFICANT (8"-18")
5058	9"	OAK	9		SIGNIFICANT (8"-18")
5059.01	11"	OAK	11		SIGNIFICANT (8"-18")
5060	12"	OAK	12		SIGNIFICANT (8"-18")
5061	17"	OAK	17		SIGNIFICANT (8"-18")
5062	9"	OAK	9		SIGNIFICANT (8"-18")
5064	16"	OAK		16	SIGNIFICANT (8"-18")
5067	11"	OAK	11		SIGNIFICANT (8"-18")
5068	11"	OAK	11		SIGNIFICANT (8"-18")
5069	16"	OAK	16		SIGNIFICANT (8"-18")

Point No.	Tree Size (")	Tree Description	Remain (")	Remove (")	Tree Designation
5071	16"	OAK	16		SIGNIFICANT (8"-18")
5072	15"	OAK	15		SIGNIFICANT (8"-18")
5073	9"	OAK	9		SIGNIFICANT (8"-18")
5074	13"	OAK	13		SIGNIFICANT (8"-18")
5075	8"	OAK	8		SIGNIFICANT (8"-18")
5076	12"	OAK	12		SIGNIFICANT (8"-18")
5078.01	14"	OAK	14		SIGNIFICANT (8"-18")
5078.02	10"	OAK	10		SIGNIFICANT (8"-18")
5079	8"	OAK	8		SIGNIFICANT (8"-18")
5080	8"	OAK	8		SIGNIFICANT (8"-18")
5081	13"	OAK	13		SIGNIFICANT (8"-18")
5082	8"	OAK	8		SIGNIFICANT (8"-18")
5083	9"	OAK	9		SIGNIFICANT (8"-18")
5084	9"	OAK	9		SIGNIFICANT (8"-18")
5085	14"	OAK	14		SIGNIFICANT (8"-18")
5086	10"	OAK	10		SIGNIFICANT (8"-18")
5087	10"	OAK	10		SIGNIFICANT (8"-18")
5088	9"	OAK	9		SIGNIFICANT (8"-18")
5089	12"	OAK	12		SIGNIFICANT (8"-18")
5090	11"	OAK	11		SIGNIFICANT (8"-18")
5092	8"	OAK	8		SIGNIFICANT (8"-18")
5093.01	11"	OAK	11		SIGNIFICANT (8"-18")
5093.02	9"	OAK	9		SIGNIFICANT (8"-18")
5094	9"	OAK	9		SIGNIFICANT (8"-18")
5095	9"	OAK	9		SIGNIFICANT (8"-18")
5096	10"	OAK	10		SIGNIFICANT (8"-18")
5097.01	9"	OAK	9		SIGNIFICANT (8"-18")
5098	10"	OAK	10		SIGNIFICANT (8"-18")
5099	8"	OAK	8		SIGNIFICANT (8"-18")
5100	10"	OAK	10		SIGNIFICANT (8"-18")
5101	12"	OAK	12		SIGNIFICANT (8"-18")
5102	11"	OAK	11		SIGNIFICANT (8"-18")
5103	13"	OAK	13		SIGNIFICANT (8"-18")
5104	15"	OAK	15		SIGNIFICANT (8"-18")
5105	18"	OAK	18		SIGNIFICANT (8"-18")
5106	9"	OAK	9		SIGNIFICANT (8"-18")
5107	11"	OAK	11		SIGNIFICANT (8"-18")
5110	10"	OAK	10		SIGNIFICANT (8"-18")
5111	11"	OAK	11		SIGNIFICANT (8"-18")
5112	10"	OAK	10		SIGNIFICANT (8"-18")
5113	10"	OAK	10		SIGNIFICANT (8"-18")
5114	10"	OAK	10		SIGNIFICANT (8"-18")
5115	10"	OAK	10		SIGNIFICANT (8"-18")
5117	10"	OAK	10		SIGNIFICANT (8"-18")
5118	12"	OAK	12		SIGNIFICANT (8"-18")
5119.01	11"	OAK	11		SIGNIFICANT (8"-18")
5119.02	11"	OAK	11		SIGNIFICANT (8"-18")
5119.03	10"	OAK	10		SIGNIFICANT (8"-18")
5119.04	9"	OAK	9		SIGNIFICANT (8"-18")
5120	10"	OAK	10		SIGNIFICANT (8"-18")
5121.01	8"	OAK	8		SIGNIFICANT (8"-18")
5122.01	11"	OAK	11		SIGNIFICANT (8"-18")
5122.02	8"	OAK	8		SIGNIFICANT (8"-18")
5123.01	14"	OAK	14		SIGNIFICANT (8"-18")
5123.02	12"	OAK	12		SIGNIFICANT (8"-18")
5124.01	11"	OAK	11		SIGNIFICANT (8"-18")
5124.02	8"	OAK	8		SIGNIFICANT (8"-18")
5125	12"	OAK	12		SIGNIFICANT (8"-18")
5126	9"	OAK	9		SIGNIFICANT (8"-18")
5127	11"	OAK	11		SIGNIFICANT (8"-18")
5128	11"	OAK	11		SIGNIFICANT (8"-18")
5129.01	14"	OAK	14		SIGNIFICANT (8"-18")
5129.02	14"	OAK	14		SIGNIFICANT (8"-18")
5131	11"	OAK	11		SIGNIFICANT (8"-18")
5132	15"	OAK	15		SIGNIFICANT (8"-18")
5133	12"	OAK	12		SIGNIFICANT (8"-18")
5135	11"	OAK	11		SIGNIFICANT (8"-18")
5136	12"	OAK	12		SIGNIFICANT (8"-18")
5137	13"	OAK	13		SIGNIFICANT (8"-18")
5138	9"	OAK	9		SIGNIFICANT (8"-18")
5139	14"	OAK	14		SIGNIFICANT (8"-18")
5140	11"	OAK	11		SIGNIFICANT (8"-18")
5146.01	14"	OAK		14	SIGNIFICANT (8"-18")
5146.02	10"	OAK		10	SIGNIFICANT (8"-18")
5147.01	12"	OAK		12	SIGNIFICANT (8"-18")
5147.02	10"	OAK		10	SIGNIFICANT (8"-18")
5147.03	9"	OAK		9	SIGNIFICANT (8"-18")
5148	9"	OAK		9	SIGNIFICANT (8"-18")
5149	10"	OAK		10	SIGNIFICANT (8"-18")
5150.01	12"	OAK		12	SIGNIFICANT (8"-18")
5150.02	11"	OAK		11	SIGNIFICANT (8"-18")
5150.03	8"	OAK		8	SIGNIFICANT (8"-18")
5151	9"	OAK		9	SIGNIFICANT (8"-18")
5152	9"	OAK		9	SIGNIFICANT (8"-18")
5153	8"	OAK		8	SIGNIFICANT (8"-18")
5154.01	12"	OAK		12	SIGNIFICANT (8"-18")
5154.02	9"	OAK		9	SIGNIFICANT (8"-18")
5155	10"	OAK		10	SIGNIFICANT (8"-18")

Point No.	Tree Size (")	Tree Description	Remain (")	Remove (")	Tree Designation
5156	8"	OAK		8	SIGNIFICANT (8"-18")
5157	9"	OAK		9	SIGNIFICANT (8"-18")
5168.01	8"	PERSIMMON		8	SIGNIFICANT (8"-18")
5170.01	8"	PECAN		8	SIGNIFICANT (8"-18")
5176	10"	OAK		10	SIGNIFICANT (8"-18")
5177	11"	OAK		11	SIGNIFICANT (8"-18")
5181	8"	OAK		8	SIGNIFICANT (8"-18")
5183	9"	OAK		9	SIGNIFICANT (8"-18")
5184	9"	OAK		9	SIGNIFICANT (8"-18")
5186	9"	OAK		9	SIGNIFICANT (8"-18")
5187	10"	OAK		10	SIGNIFICANT (8"-18")
5188.01	11"	OAK		11	SIGNIFICANT (8"-18")
5189	11"	OAK		11	SIGNIFICANT (8"-18")
5190	8"	OAK		8	SIGNIFICANT (8"-18")
5191	8"	OAK		8	SIGNIFICANT (8"-18")
5192	12"	OAK		12	SIGNIFICANT (8"-18")
5193.01	9"	OAK		9	SIGNIFICANT (8"-18")
5193.02	8"	OAK		8	SIGNIFICANT (8"-18")
5194	9"	OAK		9	SIGNIFICANT (8"-18")
5195	8"	OAK		8	SIGNIFICANT (8"-18")
5196	8"	OAK		8	SIGNIFICANT (8"-18")
5197	8"	OAK		8	SIGNIFICANT (8"-18")
5198.01	12"	OAK		12	SIGNIFICANT (8"-18")
5198.02	10"	OAK		10	SIGNIFICANT (8"-18")
5199	12"	OAK		12	SIGNIFICANT (8"-18")
5200	8"	OAK		8	SIGNIFICANT (8"-18")
5201	13"	OAK		13	SIGNIFICANT (8"-18")
5202	8"	OAK		8	SIGNIFICANT (8"-18")
5203.01	11"	OAK		11	SIGNIFICANT (8"-18")
5205	16"	OAK		16	SIGNIFICANT (8"-18")
5207.01	8"	OAK		8	SIGNIFICANT (8"-18")
5208	14"	OAK		14	SIGNIFICANT (8"-18")
5209	12"	OAK		12	SIGNIFICANT (8"-18")
5210	11"	OAK		11	SIGNIFICANT (8"-18")
5211	11"	OAK		11	SIGNIFICANT (8"-18")
5212	9"	OAK		9	SIGNIFICANT (8"-18")
5213	9"	OAK		9	SIGNIFICANT (8"-18")
5214	15"	OAK		15	SIGNIFICANT (8"-18")
5215	13"	OAK		13	SIGNIFICANT (8"-18")
5216	11"	OAK		11	SIGNIFICANT (8"-18")
5217	8"	OAK		8	SIGNIFICANT (8"-18")
5218	8"	OAK		8	SIGNIFICANT (8"-18")
5219	13"	OAK		13	SIGNIFICANT (8"-18")
5220	16"	OAK		16	SIGNIFICANT (8"-18")
5221	13"	OAK		13	SIGNIFICANT (8"-18")
5222	14"	OAK		14	SIGNIFICANT (8"-18")
5223	8"	OAK		8	SIGNIFICANT (8"-18")
5224	10"	OAK		10	SIGNIFICANT (8"-18")
5225	8"	OAK		8	SIGNIFICANT (8"-18")
5226	10"	OAK		10	SIGNIFICANT (8"-18")
5227	16"	OAK		16	SIGNIFICANT (8"-18")
5228.01	8"	OAK		8	SIGNIFICANT (8"-18")
5228.02	8"	OAK		8	SIGNIFICANT (8"-18")
5229	8"	OAK		8	SIGNIFICANT (8"-18")
5230.01	10"	OAK		10	SIGNIFICANT (8"-18")
5230.02	9"	OAK		9	SIGNIFICANT (8"-18")
5231.01	12"	OAK		12	SIGNIFICANT (8"-18")
5231.02	10"	OAK		10	SIGNIFICANT (8"-18")
5232	11"	OAK		11	SIGNIFICANT (8"-18")
5233.01	18"	OAK		18	SIGNIFICANT (8"-18")
5233.02	13"	OAK		13	SIGNIFICANT (8"-18")
5233.03	12"	OAK		12	SIGNIFICANT (8"-18")
5234	12"	OAK		12	SIGNIFICANT (8"-18")
5235	8"	OAK		8	SIGNIFICANT (8"-18")
5237.01	15"	OAK		15	SIGNIFICANT (8"-18")
5237.02	15"	OAK		15	SIGNIFICANT (8"-18")
5240	18"	OAK	18		SIGNIFICANT (8"-18")
5242	11"	OAK		11	SIGNIFICANT (8"-18")
5244	10"	OAK	10		SIGNIFICANT (8"-18")
5245	13"	OAK	13		SIGNIFICANT (8"-18")
5246	11"	OAK	11		SIGNIFICANT (8"-18")
5247	18"	OAK	18		SIGNIFICANT (8"-18")
5248	15"	OAK	15		SIGNIFICANT (8"-18")
5249	12"	OAK	12		SIGNIFICANT (8"-18")
5251	13"	OAK	13		SIGNIFICANT (8"-18")
5254	8"	OAK	8		SIGNIFICANT (8"-18")
5255	15"	OAK	15		SIGNIFICANT (8"-18")
5256	12"	OAK	12		SIGNIFICANT (8"-18")
5258	12"	OAK		12	SIGNIFICANT (8"-18")
5260	13"	OAK		13	SIGNIFICANT (8"-18")
5261	15"	OAK		15	SIGNIFICANT (8"-18")
5262	12"	OAK		12	SIGNIFICANT (8"-18")
5264	17"	OAK		17	SIGNIFICANT (8"-18")
5265	18"	OAK		18	SIGNIFICANT (8"-18")
5266	11"	OAK		11	SIGNIFICANT (8"-18")
5024.03	6"	OAK	6		UNDERSIZED
5032.02	7"	OAK	7		UNDERSIZED
5047.02	7"	OAK		7	UNDERSIZED

Point No.	Tree Size (")	Tree Description	Remain (")	Remove (")	Tree Designation
5059.02	7"	OAK	7		UNDERSIZED
5097.02	5"	OAK	5		UNDERSIZED
5121.02	5"	OAK	5		UNDERSIZED
5150.04	5"	OAK		5	UNDERSIZED
5150.05	4"	OAK		4	UNDERSIZED
5168.02	7"	PERSIMMON		7	UNDERSIZED
5168.03	6"	PERSIMMON		6	UNDERSIZED
5170.02	7"	PECAN		7	UNDERSIZED
5170.03	5"	PECAN		5	UNDERSIZED
5188.02	6"	OAK		6	UNDERSIZED
5203.02	7"	OAK		7	UNDERSIZED
5207.02	4"	OAK		4	UNDERSIZED
5233.04	7"	OAK		7	UNDERSIZED

1. UNDESIRABLE AND INVASIVE TREES ARE NOT DEPICTED ON THE TREE REMOVAL PLAN AND ARE NOT INCLUDED WITHIN THE TREE INVENTORY.
2. REFER TO THE TREE REMOVAL PLAN SHEET FOR TREE PRESERVATION AND MITIGATION TABLES.

TREE INVENTORY LEGEND

TEXT — TREE CREDITED TOWARD MITIGATION

NO.	DATE	REVISIONS	BY
3	01/05/2023	CITY COMMENTS	
2	12/5/2022	CITY COMMENTS	
1	10/21/2022	CITY COMMENTS	JL

CDS Muery
ENGINEERS | SURVEYORS
100 NE LOOP 410, STE. 300 | SAN ANTONIO, TEXAS 78216
(210) 581-1111 | TBPE NO. F-1733 | TBPLS NO. 100495-00

DESIGN BY:CLLA DATE: 10/27/2022
DRAWN BY:CLLA APPROVED BY:JL
CHECKED BY:CLLA CLLA JOB NO.: 22-057
REVIEWED BY:JL

TREE INVENTORY

HERO WAY SUBSTATION

SITE DEVELOPMENT PLANS
13151 HERO WAY WEST, LEANDER, TEXAS

REGISTERED LANDSCAPE ARCHITECT JASON S. LOCHTE 2518 STATE OF TEXAS
1/5/2023

SHEET 2 of 3

22-SD-XXX

COOPER LOCHTE
LANDSCAPE ARCHITECTURE LLC
12770 CIMARRON PATH, SUITE 100, SAN ANTONIO, TEXAS 78249 / TEL (210)821-6570

CLLA JOB #22-057

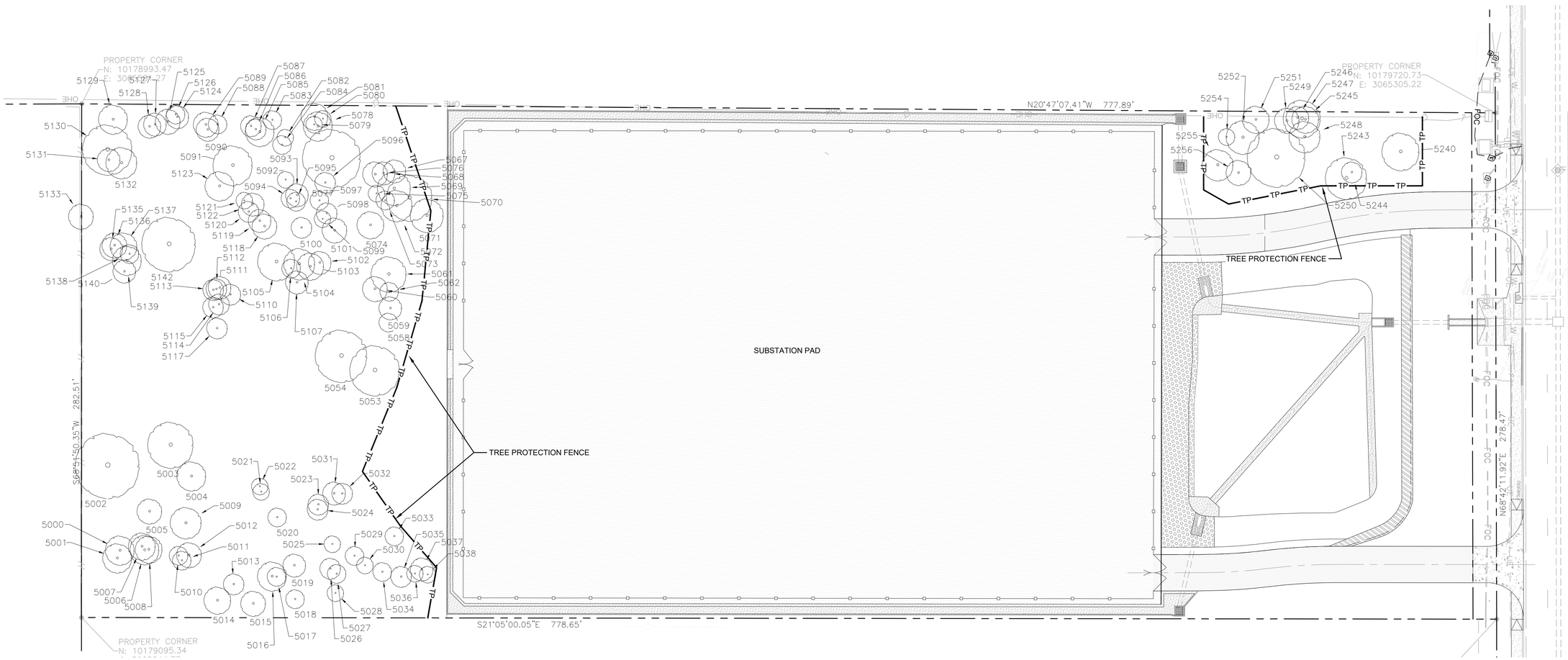

REF. SHEET L3 FOR TREE INVENTORY AND TREE PRESERVATION CALCULATIONS.

LEGEND

- EXISTING TREE TO REMAIN
- PROPERTY LINE
- TP — TP — TREE PROTECTION FENCE

TREE PRESERVATION PLAN

N

0 30 60 90 feet

1" = 30'

NOTE:
PROPER PRUNING FOR BRANCHES 1½" OR GREATER IN DIAMETER

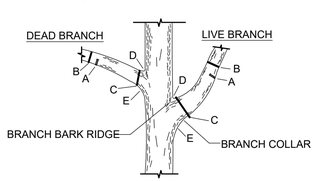

A. FIRST CUT- TO PREVENT BARK FROM BEING PEELED WHEN BRANCH FALLS.
B. SECOND CUT- TO REDUCE THE WEIGHT OF THE BRANCH.
C. FINAL CUT - ALLOW FOR HEALING COLLAR, BUT NO STUBS.
D. BRANCH RIDGES - INDENT PROPERLY BRANCH RIDGES WHICH ARE A SITE FOR DECAY.
E. DO NOT CUT FROM D TO E.

FOR OAKS ONLY: PAINT ALL WOUNDS OR CUTS WITH PRUNING PAINT WITHIN 20 MINUTES TO PREVENT THE SPREAD OF OAK WILT.

T1 TREE PRUNING
N.T.S.

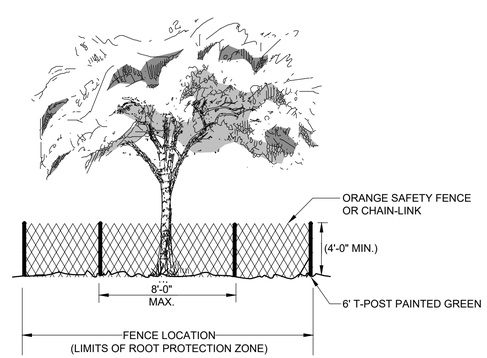

T2 TREE PROTECTION FENCE
N.T.S.

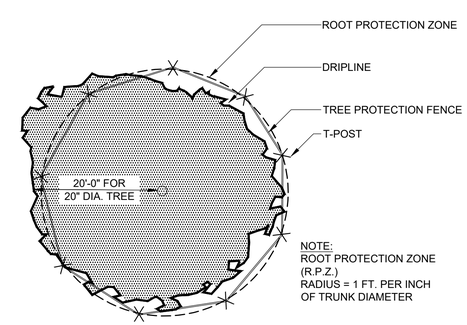

NOTE:
ROOT PROTECTION ZONE (R.P.Z.)
RADIUS = 1 FT. PER INCH OF TRUNK DIAMETER

T3 TREE PROTECTION FENCE - INDIVIDUAL TREE
N.T.S.

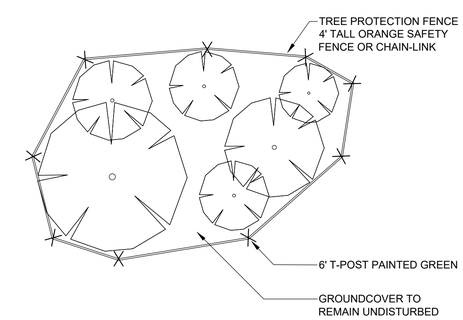

T4 TREE PROTECTION FENCE - GROUP OF TREES
N.T.S.

CLLA JOB #22-057

COOPER LOCHTE
LANDSCAPE ARCHITECTURE LLC
12770 CIMARRON PATH, SUITE 100, SAN ANTONIO, TEXAS 78249 / TEL (210)821-6570

NO.	DATE	REVISIONS	BY
3	01/05/2023	CITY COMMENTS	
2	12/5/2022	CITY COMMENTS	
1	10/21/2022	CITY COMMENTS	JL

CDS muery
ENGINEERS | SURVEYORS
8706 CODY FIVE, STE. 200 SAN ANTONIO, TEXAS 78250
TBPE FIRM F-3199 / TBPLS FIRM 10194400 / TBAE FIRM 15393

DESIGN BY:CLLA | DATE: 10/27/2022
DRAWN BY:CLLA | APPROVED BY:JL
CHECKED BY:CLLA | CLLA JOB NO.:
REVIEWED BY:JL | 22-057

TREE PRESERVATION PLAN

HERO WAY SUBSTATION
SITE DEVELOPMENT PLANS
13151 HERO WAY WEST, LEANDER, TEXAS

REGISTERED LANDSCAPE ARCHITECT
JASON S. LOCHTE
2518
STATE OF TEXAS
1/5/2023

SHEET
3 of 3

22-SD-XXX

Tree – 5047 (20” Live Oak)

Tree – 5143 (26” Live Oak)

Tree – 5145 (29” Live Oak)

Tree – 5172 (40” Live Oak) (LEFT) / 5174 (23” Hackberry) (RIGHT)

Tree – 5174 (23” Hackberry) (RIGHT) / 5172 (40” Live Oak) (LEFT)

Tree – 5206 (23” Live Oak

Tree – 5259 (30” Live Oak)

Tree – 5263 (21” Live Oak)

AGENDA ITEM # 19

EXECUTIVE SUMMARY
01/19/2023

AGENDA SUBJECT:

Discuss and consider action regarding Ordinance Case OR-21-0005 to amend City Code of Ordinances Chapter 13 Utilities to add provisions for development phasing; and to provide for related matters; Williamson & Travis Counties, Texas.

BACKGROUND:

An amendment was adopted to the Utilities Code and Subdivision Ordinance in January of 2022. This amendment was in response to the exponential growth rates over the past years and the desire to manage the number of LUE's (Living Unit Equivalents) added to the water system. The amendment included the addition of provisions for development phasing in response to our water concerns. A provision was included that requires that the City Council review the change and confirm that the phasing is still needed. Since January of 2022 we have reviewed two (2) concept plan cases that were required to provide phasing.

- Wildsprings Concept Plan
  - 2023 – 145 units
  - 2025 – 119 units
  - 2027 – 65 units
- Barksdale Concept Plan
  - 2022 – 54 units
  - 2023 – 49 units

The ordinance approving the amendment stated that this ordinance shall be reviewed by the Council annually. Staff does not have any recommended changes to the ordinances at this time.

HISTORY/TIMELINE:

01/06/2022 - Ordinance Amendment Adoption

APPLICANT/AGENT:

City of Leander

PRESENTER:

Robin M. Griffin, AICP, Executive Director of Development Services

---

Attachments

1. Subdivision Ordinance Amendment - Phasing
2. Utility Ordinance Amendment - Phasing

AN ORDINANCE OF THE CITY OF LEANDER, TEXAS

ORDINANCE NO. 22-005-00

AN ORDINANCE OF THE CITY OF LEANDER, TEXAS AMENDING SECTIONS OF ARTICLE 10.02, EXHIBIT A, THE SUBDIVISION ORDINANCE TO UPDATE THE DEFINITIONS SECTION, PROVIDE OPTIONS FOR A DUE DILIGENCE REPORT, MODIFY APPLICATION COMPLETION REVIEW REQUIREMENTS, REMOVE THE A, B, AND C STREET REQUIREMENTS, UPDATE THE CONCEPT PLAN SUBMITTAL REQUIREMENTS TO PROVIDE OPTIONS FOR CONCURRENT REVIEW WITH THE PRELIMINARY PLAT PROCESS, PROVIDE PHASING REQUIREMENTS, REMOVE MYLAR REQUIREMENTS, UPDATE EASEMENT REQUIREMENTS, UPDATE THE BUFFER ZONE REQUIREMENTS; PROVIDING A SEVERABILITY CLAUSE, PROVIDING SAVINGS, EFFECTIVE DATE AND OPEN MEETINGS CLAUSES, AND PROVIDING FOR RELATED MATTERS.

WHEREAS, the Planning & Zoning Commission held a public hearing on the proposed amendments to Chapter 10, Article 10.02, Section 10.02.001, Exhibit A, Leander Code of Ordinances (the "Subdivision Ordinance"); and forwarded its recommendation on the amendments to the City Council; and

WHEREAS, after publishing notice of the public hearing at least fifteen days prior to the date of such hearing, the City Council at a public hearing has considered the proposed amendments and finds that the amendments are reasonable and necessary to protect the health, safety, and welfare of the present and future residents of the City; and

WHEREAS, regarding the requirements for phasing of subdivisions are provided herein, such requirements addressing the timing of review of phases of the subdivision and constructing phases in accordance with their sequence are reasonable and necessary for the orderly construction of subdivisions and to avoid negative impacts that have arisen from nonsequential review and construction of phases;

NOW, THEREFORE, BE IT ORDAINED BY THE CITY COUNCIL OF THE CITY OF LEANDER, TEXAS, THAT:

SECTION 1. Findings of Fact. The above and foregoing recitals are hereby found to be true and correct and are incorporated herein as findings of fact.

SECTION 2. Amendment of Article I, Section 1. Article I, Section 1 of the Subdivision Ordinance is amended by adding the following definitions:

Due Diligence Report means a report that provides details of a property including zoning, future land use categories, utilities, subdivision requirements, and other similar information. This report may be requested in lieu of a Pre-Development Meeting.

Executive Director of Development Services means the person appointed by the City Manager to oversee the Development Services Department and serve as the Planning Director.

Greenbelt means a series of connected open spaces that may follow natural features such as creeks or streams.

Lot Area means the area contained within the boundary lines of a lot, excluding any street, easement for street purposes, or street right-of-way.

Lot, Flag means a lot resulting from a division of a tract of land that, before its division, did not have sufficient width on a street to create more than one lot abutting said street but had sufficient area and depth to be divided into more than one buildable lot.

Parent Tract means the tract or parcel of land from which the property being platted is derived.

Phasing Plan means the Development Phasing Plan for the development of a subdivision that provides the timing of each phase or subsection approved in accordance with Article 13.12 of the Code, and that includes the number of lots and the infrastructure to be completed in each phase, and any other information required by Article 13.12 of the Code.

Pre-Development Meeting means a meeting with city staff to help familiarize the applicant with applicable codes and regulations. The Director of Planning may waive this requirement if they deem that the meeting is not necessary. A Due Diligence Report may be prepared in lieu of a Pre-Development Meeting.

Private Street means a street that is not dedicated to the public for maintenance, operation or ownership. It is owned and maintained by either a Homeowners' Association for residential developments or Property Owners' Association for nonresidential developments.

Replat means to re-subdivide all or any part of a recorded plat, which does not require the vacation of the entire preceding plat.

Right-of-Way (ROW) means a strip of land acquired by dedication, prescription, or condemnation and intended to be occupied by a street, trail, water line, wastewater line, and/or other public utilities or facilities.

Roadway means the paved area of a street between the face of the curb lines, including the driving, parking, and bicycle lanes.

SECTION 3. Amendment of Article I, Section 1. Article I, Section 1 of the Subdivision Ordinance is amended by removing the following definitions:

> ***A Street*** means streets that provide the highest level of pedestrian amenities and are intended to provide a walkable connection between commercial and residential uses. Type A streets prohibit parking between the building façade and the public right-of-way. A continuous building frontage is required on A Streets, and may only be broken by a street, pedestrian passage, courtyard or similar feature approved by the Director of Planning. For phased building construction within a block, a screen wall or landscape hedge shall be constructed at the building frontage line prior to building construction. A map identifying the different street types shall be maintained and kept on file with the Planning Department.
>
> ***B Street*** means streets that are more automobile-oriented, but still provide pedestrian amenities and limit the amount of surface parking between buildings and the street. A continuous building frontage is required on B Streets, and may only be broken by a street, pedestrian passage, courtyard or similar feature approved by the Director or Planning. For phased building construction within a block, a screen wall or landscape hedge shall be constructed at the building frontage line prior to building construction. Surface parking consisting of no more than one drive aisle with head-in parking spaces on each side of the drive aisle are permitted between the building and the right-of-way for B Streets. All collector streets shall be classified as B Streets unless designated otherwise on the A, B, & C Streets Map. A map identifying the different street types shall be maintained and kept on file with the Planning Department.
>
> ***Backage Road*** means a road that runs parallel to or alongside an arterial street that provides the main point of access to property.
>
> ***C Street*** means streets that are the most automobile-oriented and provide for significant amounts of surface parking between buildings and the public right-of-way. A map identifying the different street types shall be maintained and kept on file with the Planning Department.

SECTION 4. Amendment of Article I, Section 1. Article I, Section 1 of the Subdivision Ordinance is amended by modifying the following definitions to read as follows:

> ***Caliper*** means the trunk diameter of a tree at four (4) feet above natural grade for existing trees for the purposes of a tree survey. Caliper means trunk diameter of a tree at twelve (12") inches above natural grade for newly planted trees.
>
> ***Comprehensive Plan*** means the City's comprehensive plan adopted pursuant to Chapter 213, Texas Local Government Code and Sections 10.02 and 10.03 of the City Charter. The plan includes the overall development plan for the community which provides long-range development policies including all specified individual elements thereof among which are the plans for land intensities; land subdivision; circulation; and community facilities, utilities and services.

County means, with respect to land located in Williamson County, Williamson County, Texas; and, with respect to land located within Travis County, Texas.

Floodplain means channel of a waterway and the adjacent land area subject to inundation during the design storm.

SECTION 5. Amendment of the term "Flood Plain". The term "flood plain" wherever it appears in the Subdivision Ordinance shall be modified to appear as "Floodplain".

SECTION 6. Amendment of Article I, Section 8. Article I, Section 8 of the Subdivision Ordinance is hereby amended by adding Section 8(e) and renumbering the existing subsection (e) to be subsection (f).

(e) A tract of land may not be served or connected with City utilities unless a plat has been approved and recorded for said tract of land, nor shall the City have any obligation to extend utility service to any parcel created in violation of this code.

SECTION 7. Amendment of Article II, Section 20(c). Article II, Section 20(c) of Subdivision Ordinance is hereby amended in its entirety to read as follows:

(c) **Pre-Development Meeting.** The applicant is required to attend a pre-development meeting with city staff to help familiarize the applicant with applicable codes and regulations. The Director of Planning may waive this requirement if they deem that the meeting is not necessary. A Due Diligence Report may be prepared in lieu of a Pre-Development Meeting.

SECTION 8. Amendment of Article II, Section 20(d). Article II, Section 20(d) of Subdivision Ordinance is hereby in its entirety to read as follows:

(d) General Subdivision Process; Phasing.

(i) Generally, the subdivision process is comprised of four (4) individual steps, consisting of the Concept Plan, the Preliminary Plat, Construction Plans, and the Final Plat. Each step of the development process has established deadlines and expirations that must be met in order for the application and any approval(s) granted to remain valid, in effect and eligible to continue to the next step of, or to complete, the development process. Compliance with each such established deadline constitutes a separate required performance and approval.

(ii) Phasing Plan.

a) A subdivision is required to be phased if it includes more than thirty (30) lots or units. The proposed Phasing Plan is required to be submitted concurrently with the Concept Plan and must be approved prior to approval of a Concept Plan. If an applicant wishes to amend an approved Phasing Plan after approval at the Concept Plan stage, the applicant is required to submit and receive

approval of the Phasing Plan amendment prior to or concurrently with the Preliminary Plat. Article 13.12 of the Code governs the requirements for a Phasing Plan and procedure for review and approval.

(iii) Impact of the Phasing Plan on the Sequence of Preliminary Plat and Construction Plan Applications.

a) If an applicant applies for a Preliminary Plat for less than the entire property shown in the Concept Plan, the Preliminary Plat for each phase may not be reviewed concurrently, must be submitted in the order shown on the approved Phasing Plan, and review of the Preliminary Plat for a particular phase must be completed and scheduled for Commission approval before a subsequent phase may be submitted for review. In addition, the Preliminary Plat applications must contain the property shown in each phase of the approved Phasing Plan.

b) Construction Plans for each phase shall be submitted in accordance with the phasing shown on the approved Phasing Plan, must be submitted in the order shown on the approved Phasing Plan, may not be reviewed concurrently, and review of the construction plans for a particular phase must be completed

c) before a subsequent phase may be submitted for review. The infrastructure in an approved Construction Plan for a particular phase set must be completed and accepted by the City before the applicant may commence construction on a subsequent phase of the subdivision.

SECTION 9. Amendment of Article II, Section 20(g). Article II, Section 20(g) of Subdivision Ordinance is hereby in its entirety to read as follows:

(g) **Application Completeness Review.**

(1) City staff shall review all applications, for completeness and either accept the application as complete or reject the application and provide the applicant with written notice of rejection that specifies the reasons for rejection within ten (10) business days of the date the application is submitted. An application will be considered complete if it is submitted in the required form and in accordance with the sequencing required in the Phasing Plan and Section 20(d)(iii), includes all information and documents required in the application, and is accompanied by the applicable fees. All applications shall also include a list of any requested variance from the ordinance. Resubmittal Applications are also subject to Section 20(h). An application that is not complete, does not include the information or documents required in the application, or is not accompanied by the applicable fees may not be accepted by the City. If the application is determined to be incomplete, the Director of Planning shall provide written notice of the rejection of the application that includes a description of the application's deficiencies. No further processing of

the application will occur until the deficiencies are corrected.

(2) In addition to the items required on the Construction Plan application and checklist, the following must be reviewed and approved prior to the submittal of the Construction Plan application and submitted with the application in order for it to be accepted as complete, unless the City Engineer or Director of Planning determines that one of the items is either not needed or may be reviewed concurrently to process the Construction Plan Application:

(a) Lift station report
(b) Water and wastewater capacity analysis
(c) Drainage study
(d) Floodplain development permit/CLOMR
(e) Traffic impact analysis

SECTION 10. Amendment of Article II, Section 21 (a)(1)&(2). Article II, Section 21 (a) (1) & (2) of the Subdivision Ordinance are hereby amended in their entirety to read as follows:

(a) **Purpose.** The purpose of the Concept Plan is to demonstrate conformance with the Comprehensive Plan, compatibility of the proposed development with this and other applicable City ordinances, and the coordination of improvements within and among individually platted parcels, sections, or phases of a development, prior to the consideration of a Preliminary Plat unless otherwise identified in this ordinance.

(1) A Concept Plan shall be required for all subdivisions of land, except as otherwise provided for in this Ordinance for Short Form Final Plats. The Developer shall submit a Concept Plan prior to a Preliminary Plat for approval when the proposed subdivision includes any of the following:

(i) A new road network; or
(ii) More than fifteen (15) lots; or
(iii) More than thirty (30) acres.

When a Concept Plan does not meet the above criteria, it may be submitted for concurrent review with the Preliminary Plat when the Alternative Review Process is selected.

(2) The Concept Plan shall include the Parent Tract to ensure the orderly planning of streets, utilities, drainage, and other public facilities. The Concept Plan shall also include all adjacent and contiguous land, owned or controlled by the developer or the person, firm or corporation that sold the tract being developed.

SECTION 11. Amendment of Article II, Section 21 (c)(16), (17), (18), & (19). Article II, Section 21 (c) (16), (17), (18), and (19) of the Subdivision Ordinance are hereby amended in their entirety to read as follows:

(16) A proposed Phasing Plan for the development of future sections.

(17) A park plan in conformance with this ordinance including all land proposed for dedication, all proposed park facilities, and calculations or other information indicating compliance with park requirements.

(18) Any information required by the most recent City concept plan application/checklist.

(19) For Resubmittal Applications, in addition to containing the information and documents required by this subsection (c), a transmittal letter that describes how each reason for disapproval of the Concept Plan is being remedied or how each condition of a conditional approval is being satisfied, as applicable, and identifying the location in the Concept Plan application where each remedy or response to a condition can be found. The transmittal letter shall further identify whether any other changes to the application have been made other than those necessary to respond to the reasons for disapproval.

SECTION 12. Amendment of Article II, Section 21(f). Article II, Section 21(f) of Subdivision Ordinance is hereby amended to add section (f)(6) to read as follows:

(6) The Commission and Council shall approve the Concept Plan if it conforms with the requirements of this Code, the Comprehensive Plan, the Composite Zoning Ordinance, and the Texas Local Government Code and the applicant has obtained approval of a Phasing Plan, while taking into account access to and extension of the City water system, reuse water system (if applicable), wastewater system, and stormwater drainage facilities.

SECTION 13. Amendment of Article II, Section 22(a). Article II, Section 22(a) of Subdivision Ordinance are hereby amended in its entirety to read as follows:

(a) **Purpose.** The Preliminary Plat provides detailed graphic information and associated text indicating property boundaries, easements, land use, streets, utilities, drainage, and other information required to evaluate proposed subdivisions of land. A Preliminary Plat shall be required for any subdivision of land, except as otherwise provided for in this Ordinance, subsequent to Concept Plan approval or concurrently if the subdivision meets the criteria in Section 21 of this ordinance.

SECTION 14. Amendment of Article II, Section 22(c)(1). Article II, Section 22(c)(1) of Subdivision Ordinance is hereby amended in its entirety to read as follows:

(1) Concept Plan and Phasing.

(i) Either the Concept Plan proposed for concurrent review; or the approved concept plan.

(ii) The approved Phasing Plan and the proposed amended Phasing Plan, if an amendment is sought.

(iii) If an applicant applies for a Preliminary Plat for less than the entire property shown in the Concept Plan, verification that the Preliminary Plat is submitted in the order shown on the approved Phasing Plan and that all prior phases have been reviewed and scheduled for approval by the commission.

SECTION 15. Amendment of Article II, Section 22(c)(4). Article II, Section 22(c)(4) of Subdivision Ordinance is hereby amended to remove (viii) and renumber the remainder of the section accordingly.

SECTION 16. Amendment of Article II, Section 22(h). Article II, Section 22(h) of the Subdivision Ordinance is hereby amended by amended in its entirety to read as follows:

(h) **Application Expiration.**

(1) The Preliminary Plat application shall expire nine (9) months after the date that all initial staff review comments from all reviewing departments have been issued on the application if the Preliminary Plat is not approved due to the applicant's failure to cause the application to comply with applicable city regulations. If the Concept Plan and the Preliminary Plat applications are submitted concurrently, the Concept Plan and Preliminary Plat applications shall both expire nine (9) months after the date that all staff review comments from all reviewing departments have been issued on the applications if both the Concept Plan and Preliminary Plat are not approved due to the applicant's failure to cause the applications to comply with all applicable City regulations.

(2) The Planning Department may grant one six (6) month extension if the applicant can show substantial progress in obtaining approval of the Preliminary Plat, and the Concept Plan if submitted concurrently with the Preliminary Plat application. Substantial progress shall consist of, at a minimum, a resubmission of the Preliminary Plat, the concept plan in the case of a concurrent submission, and all relevant materials by the applicant that address all initial staff review comments from all reviewing departments.

(3) After expiration of an application, any new Preliminary Plat application will be required to be re-submitted as a new application including re-paying all of the fees associated with this process.

SECTION 17. Amendment of Article II, Section 22(i). Article II, Section 22(i) of the Subdivision Ordinance is hereby amended in its entirety to read as follows:

(i) **Approval Expiration.**

(1) The approval of a Preliminary Plat shall expire two (2) years after the filing date unless:

(a) Corresponding Construction Plans and/or Final Plats on all, or a portion of, the land approved on the Preliminary Plat are filed, and, if necessary, additional Construction Plans and/or Final Plats are filed in not greater than two year intervals until all of the land within the Preliminary Plat has approved Construction Plans and Final Plats; provided that approval of all such Construction Plans and Final Plats are obtained within seven (7) years of the filing date of the Preliminary Plat; or

(b) An extension is granted by the Commission in accordance with this Ordinance; provided that in no event shall an extension be granted that exceeds nine (9) years after the filing date.

(2) When a Concept Plan application is submitted and approved concurrently with a Preliminary Plat application, the approval of the Concept Plan shall expire when the approval of the Preliminary Plat expires under Section 22(i)(1).

SECTION 18. Amendment of Article II, Section 23(c). Article II, Section 23(c) of the Subdivision Ordinance are hereby amended in its entirety to read as follows:

(c) **Content.** Construction Plans shall include all on and off-site improvements required to serve the proposed development as indicated on the approved Preliminary Plat and in compliance with applicable ordinances, codes, standards and policies of the City, and other applicable governmental entities. All Construction Plans shall be signed and sealed by a licensed professional engineer, licensed to practice in the State of Texas, include all information required by the most recent application/checklist, and shall contain or have attached thereto:

(1) Cover Sheet.

(i) The appropriate project name, date, and the name, addresses and phone numbers of the developer, engineer and surveyor, etc.

(ii) A location map showing the relation of the subdivision to streets and other prominent features in all directions for a radius of at least one (1) mile using a scale of one inch equals two thousand feet (1" = 2,000'). The latest edition of the USGS 7.5 minute quadrangle map is recommended.

(2) Street and Roadway Systems:

(i) The horizontal layouts and alignments showing geometric data and other pertinent design details. The horizontal layout shall also show the direction of storm water flow and the location of manholes, inlets and special structures;

(ii) Vertical layouts and alignments showing existing and proposed center line, right and left right-of-way line elevations along each proposed roadway.

(iii) An analysis of vertical sight distance for proposed street intersections in accordance with the Transportation Criteria Manual.

(iv) Typical right-of-way cross sections showing pertinent design details and elevations as prescribed in the City Standard Details and Specifications;

(v) Typical paving sections showing right-of-way width, lane widths, median widths, shoulder widths, and pavement recommendations;

(vi) Attendant documents containing any additional information required to evaluate the proposed roadway improvements, including geotechnical information and traffic impact studies; and

(3) Drainage Improvements:

(i) Detailed design of all drainage facilities as indicated in the Preliminary Plat phase, including typical channel or paving section, storm sewers and other storm water control facilities.

(ii) Typical channel cross-sections, plan and profile drawings of every conduit/channel shall be shown.

(iii) Existing and proposed topographic conditions indicating one (1) foot contour intervals for slopes less than 5%, two (2) foot contour intervals for slopes between 5% and 10%, and five (5) foot contour intervals for slopes exceeding 10%, and referenced to a United States Geological Survey or Coastal and Geodetic Survey bench mark or monument.

(iv) Attendant documents containing design computations in accordance with this Ordinance, and any additional information required to evaluate the proposed drainage improvements.

(v) A copy of the complete application for flood plain map amendment or revision, as required by the Federal Emergency Management Agency (FEMA), if applicable.

(4) Erosion and Sedimentation Controls:

(i) Proposed fill or other structure elevating techniques, levees, channel modifications and detention facilities.

(ii) Existing and proposed topographic conditions with vertical intervals not greater than one (1) foot referenced to a United States Geological Survey or Coastal and Geodetic Survey bench mark or monument.

(iii) The location, size, and character of all temporary and permanent erosion and sediment control facilities with specifications detailing all on-site erosion control measures which will be established and maintained during all periods of development and construction.

(iv) Contractor staging areas, vehicle access areas, temporary and permanent spoils storage areas.

(v) A plan for restoration for the mitigation of erosion in all areas disturbed during construction.

(5) Water Distribution Systems:

(i) The layout, size and specific location of the existing and proposed water mains, pump stations, storage tanks and other related structures sufficient to serve the proposed land uses and development as identified in the Preliminary Plat phase and in accordance with the City Standard Details and Specifications.

(ii) The existing and proposed location of fire hydrants, valves, meters and other fittings.

(iii) Design details showing the connection with the existing City water system.

(iv) The specific location and size of all water service connections for each individual lot.

(v) Attendant documents containing any additional information required to evaluate the proposed water distribution system.

(6) Wastewater Collection Systems:

(i) The layout, size and specific location of the existing and proposed wastewater lines, manholes, lift stations, and other related structures

sufficient to serve the land uses and development as identified in the Preliminary Plat phase, in accordance with all current City standards, specifications, and criteria for construction of wastewater systems.

(ii) Plan and profile drawings for each line in public right-of-ways or public utility easements, showing existing ground level elevation at center line of pipe, pipe size and flow line elevation at all bends, drops, turns, and station numbers at fifty (50) foot intervals.

(iii) Design details for manholes and special structures. Flow line elevations shall be shown at every point where the line enters or leaves the manholes.

(iv) Detailed design for lift stations, package plants or other special wastewater structures.

(v) Attendant documents containing any additional information required to evaluate the proposed wastewater system, and complete an application for State Health Department approval.

(7) Fill Material Storage. The location of the fill material pile, which must comply with Section 48 of this Ordinance.

(8) Street Lighting. The location, size, type and description of street lights according to City Standard Details and Specifications.

(9) Street Signs. The location, size, type and description of street signs according to City Standard Details and Specifications.

(10) Speed Limit Signs and Permanent Traffic Barricades. The location, size (where applicable), and type of speed limit signs and permanent traffic barricades according to City Standard Details and Specifications.

(11) Sidewalks. The location, size and type of sidewalks and pedestrian ramps according to City Standard Details and Specification.

(12) Improvements for Parks and other Public and Common Areas - as identified and/or approved on the Preliminary Plat.

(13) The location, size and description of all Significant Trees (to remain and to be removed), and Replacement Trees to meet the requirements of this Ordinance.

(14) Landscaping and Screening. The location, size and description of all landscaping and screening materials as required by the Composite Zoning Ordinance.

(15) Street Trees. The location and species of all proposed street trees on every street in accordance with all current City standards, specifications and criteria for the installation of street trees.

(16) Design Criteria. Final design criteria, reports, calculations, and all other related computations, if not previously submitted with the Preliminary Plat.

(17) Cost Estimates. A cost estimate of each required improvement, prepared, signed and sealed by a professional engineer licensed to practice in the State of Texas.

(18) Dry Utility Plan. A plan demonstrating the location of the proposed dry utilities.

(19) Compliance with Phasing Plan. Verification that the construction plans are submitted in accordance with the phasing shown on the approved Phasing Plan and that all prior phases have been reviewed.

(20) For Resubmittal Applications, in addition to containing the information and documents required by this subsection (c), a transmittal letter that describes how each reason for disapproval of the Construction Plans are being remedied or how each condition of a conditional approval is being satisfied, as applicable, and identifying the location in the Construction Plan application where each remedy or response to a condition can be found. The transmittal letter shall further identify whether any other changes to the application have been made other than those necessary to respond to the reasons for disapproval.

SECTION 19. Amendment of Article II, Section 23(e)(2). Section 23(e)(2) of the Subdivision Ordinance is hereby amended in its entirety to read as follows:

(2) If Construction Plans are approved, then the Director of Planning, City Engineer, Director of Public Works, Director of Parks and Recreation, and the Fire Marshal shall sign the cover sheet of the Construction Plans and a pre-construction meeting shall be scheduled. A construction plan permit shall be signed and issued during the pre-construction meeting after completion and acceptance by the City of the improvements for the prior phase of the subdivision. A signed copy of the plans shall be returned to the applicant and a copy shall be retained for City records.

SECTION 20. Amendment of Article II, Section 24(j). Article II, Section 24(j) of the Subdivision Ordinance is hereby amended in its entirety to read as follows:

(j) **Recordation.**

(1) Prior to the recordation of the Final Plat:

(i) The Final Plat shall have been approved by the Commission and signed by the appropriate City officials pursuant to the provisions of this Ordinance.

(ii) Copies of any agreements required providing for the proper and continuous operation, maintenance, and supervision of any facilities that are of common use or benefit which cannot be satisfactorily maintained, or which have been rejected for operation and/or maintenance, by an existing public agency shall be executed.

(2) City staff shall, upon determination that all provisions of this Ordinance have been satisfied, and all the above conditions have been met, obtain signatures certifying Final Plat approval by the Chairperson of the Commission, as attested to by the Commission Secretary.

(3) Once the original Final Plat has been certified by the Chairperson of the Commission, City staff shall notify the developer that the original, signed Final Plat is ready to be recorded.

(4) The City shall make arrangements to have the Final Plat filed for recordation at the developer's expense in the Official County Records at the appropriate county offices.

(5) If the land area represented by the subdivision is located outside the corporate limits of the City on the date of its filing for recordation with the Official County Records, then it must be approved by the Commissioners Court of the County prior to recordation unless an agreement between the City and County stipulates differently. It shall be the responsibility of the developer to be familiar with the process, procedures, and requirements necessary to secure County approval. Such approval shall be evidenced by the signature of the statement of certification by the County Judge.

(6) After the Plat is filed for recordation, the City shall obtain official scanned copies of the recorded final plat. The City shall not issue final address Plats or permits for lots within the subdivision until the Final Plat has been recorded, the developer has paid the county recordation fee, and the scan of the recorded plat is received.

SECTION 21. Amendment of Article II, Section 25(j). Article II, Section 25(j) of the Subdivision Ordinance is hereby amended in its entirety as follows:

(j) **Responsibility.** Notwithstanding the approval of any Amended Plat by the Planning Director, the developer and the engineer that prepares and submits such Plats shall be and remain responsible for the adequacy of the design and nothing in this Ordinance shall be deemed or construed to relieve or waive the responsibility of the developer or his/her engineer for or with respect to any Plat submitted.

SECTION 22. Amendment of Article II, Section 26(c). Article II, Sections 26(c) of the Subdivision Ordinance are hereby amended in its entirety to read as follows**:**

(c) **Content.** The content of the Short Form Final Plat shall correspond with the content for Final Plats as required by this Ordinance, except that:

(1) Construction Plans may not be required.

(2) The City may permit omission of any informational requirements that are determined by the City to place an excessive burden on the applicant, including, but not limited to contours, centerlines of existing watercourses, etc.

(3) The City shall require the following note on the Final Plat: This subdivision is subject to all general notes and restrictions appearing on the Plat of _____, Lot(s) _____, recorded at Instrument Number _____ of Plat Records of _____ County, Texas.

SECTION 23. Amendment of Article II, Section 26(d). Article II, Section 26(d) of the Subdivision Ordinance are hereby amended in its entirety to read as follows:

(d) **Procedure.** The procedure for review and approval of a Short Form Final Plat shall follow the procedure for Final Plats, except that:

(1) The Short Form Final Plat may be submitted without approval of a Concept Plan, Preliminary Plat or Construction Plans. The Plat, prepared by a surveyor, and engineer if required, and bearing their seals shall be submitted to the Commission for approval before recordation of the Plat.

(2) Legible prints, as indicated on the application form shall be submitted at least thirty (30) days prior to the regular meeting of the Commission along with all information required by the most recent application/checklist and the following:
   - (i) Completed application forms and the payment of all required fees.
   - (ii) Copy of the deed restrictions or covenants, if such documents are to be used. These shall be filed for record in conjunction with the filing of the Plat.
   - (iii) Certification from all applicable taxing authorities that all taxes due on the property have been paid.
   - (iv) Notification materials as required herein.
   - (v) A petition requesting annexation, if applicable.
   - (vi) Any attendant documents needed to supplement the information provided on the Plat.

SECTION 24. Amendment of Article II, Section 28. Article II, Section 28 (g) (4) of the Subdivision Ordinance is hereby amended in its entirety to read as follows:

(4) The City shall not accept dedications of required improvements, nor release or reduce a performance bond or other assurance, until such time it is determined that:
   - (i) All improvements have been satisfactorily completed.
   - (ii) Two (2) copies of record drawings have been submitted to and approved by the City Engineer, along with a statement prepared by a licensed professional engineer that all improvements have been installed and constructed in accordance with the submitted record drawings; provided that applicants subdividing property in the Wholesale Wastewater Service Areas shall submit three (3) copies of such record drawings.
   - (iii) Copies of all inspection reports, shop drawings and certified test results of construction materials have been submitted to and approved by the City Engineer.
   - (iv) Digital files containing computer generated drawings of all public improvements shown on the Construction Plans, and all lot lines shown on the Final Plat, have been submitted to the City Engineer to update City record drawings.
   - (v) One (1) Maintenance bonds meeting the requirements of this Ordinance have been provided.
   - (vi) An affidavit of all bills paid and a release of liens have been provided.
   - (vii) Any and all other requirements identified in the Final Plat process have been satisfied.
   - (viii) Digital file containing computer generated drawings of all public improvements shown on the Construction Plans, and all lot lines shown on the Final Plat, have been submitted to the City Engineer to update City record drawings.
   - (ix) A fiscal surety meeting the requirements of Section 48 (f), if required by that Section.

SECTION 25. Amendment of Article III, Section 46. Article II, Section 46 of the Subdivision Ordinance is hereby amended in its entirety to read as follows:

SECTION 46. EASEMENTS

(a) The developer shall dedicate easements that allow approved lots within the subdivision to have access to all public utilities. Where necessary to adequately serve the addition or subdivision with public utilities, easements shall be dedicated for all public utilities including water lines, reuse water lines, wastewater lines, and stormwater drainage facilities and associated appurtenances. Such easements shall be provided as deemed necessary by the Commission. Easements shall be dedicated according to the requirements delineated in the application and checklists.

(b) All existing and proposed easements, safety lanes, and rights-of-way shall be clearly indicated on the Plat or Plan, as well as an indication to the use of each easement or right-of-way.

(c) No permanent structure may be placed in or over any easement or right-of-way except a structure whose use and location are necessary to the designated use of the right-of-way or easement or which otherwise will not affect the use, maintenance or repair of such easement.

(d) The width and alignment of all easements or rights-of-way to be dedicated shall be determined by the City Engineer, any applicable utility provider and the Commission, and approved by the Commission, and shall be accompanied by a notarized statement of dedication on the Plat. Such easements shall, at a minimum, include a ten-foot public utility easement dedicated immediately adjacent to all street rights-of-way.

(e) Easements shall be established and dedicated for all public utility and drainage appurtenances, including common access areas, and other public uses requiring dedication of property rights.

(f) In so far as practicable, easements shall not be centered on a property line, but shall be located entirely on one (1) side of a lot.

(g) The City Manager is authorized to sign approval and acceptance of easements granted outside of the subdivision platting process that have been reviewed and approved by the City Engineer and that are granted using a form substantially similar to the form approved by the City Attorney.

SECTION 26. Amendment of Article III, Section 49. Article III, Section 49 of the Subdivision Ordinance is hereby amended to add subsection (c) as follows and renumber the remainder of the section accordingly:

(c) In no case shall the Buffer Zones be less restrictive than the 100 year floodplain as depicted from the best available base floodplain model to date using the rainfall data as approved by the City as part of the plan review process.

Any revision to the base hydraulic model must be supported with adequate data/information; and must be discussed with city engineering staff. Such floodplain analysis shall be approved by the city as part of the plan review process.

In case the latest hydraulic model is not available, the city's floodplain administrator

shall approve any proposed method for the determination of special flood hazard area boundaries. The floodplain analysis and modelling for such method shall be submitted, reviewed and approved as part of the plan review process.

SECTION 27. Conflicting Ordinances. Exhibit "A", Article 10.02, Leander Code of Ordinances is amended as provided herein. All ordinances or parts thereof conflicting or inconsistent with the provisions of this ordinance as adopted herein, are hereby amended to the extent of such conflict. In the event of a conflict or inconsistency between this ordinance and any other code or ordinance of the City, the terms and provisions of this ordinance shall govern.

SECTION 28. Savings Clause. All rights and remedies of the City of Leander are expressly saved as to any and all violations of the provisions of any ordinances affecting subdivision within the City which have accrued at the time of the effective date of this ordinance; and, as to such accrued violations and all pending litigation, both civil and criminal, whether pending in court or not, under such ordinances, same shall not be affected by this ordinance but may be prosecuted until final disposition by the courts.

SECTION 29. Effective Date. After its passage of this Ordinance in accordance with the provisions of the Tex. Loc. Gov't. Code and the City Charter.

SECTION 30. Severability. It is hereby declared to be the intention of the City Council that the sections, paragraphs, sentences, clauses and phrases of this Ordinance are severable and, if any phrase, sentence, paragraph or section of this Ordinance should be declared invalid by the final judgment or decree of any court of competent jurisdiction, such invalidity shall not affect any of the remaining phrases, clauses, sentences, paragraphs and sections of this Ordinance, since the same would have been enacted by the City Council without the incorporation of this ordinance of any such invalid phrase, clause, sentence, paragraph or section. If any provision of this Ordinance shall be adjudged by a court of competent jurisdiction to be invalid, the invalidity shall not affect other provisions or applications of this Ordinance which can be given effect without the invalid provision, and to this end the provisions of this Ordinance are declared to be severable.

SECTION 31. Open Meetings. It is hereby officially found and determined that the meeting at which this ordinance is passed was open to the public as required and that public notice of the time, place and purpose of said meeting was given as required by the Open Meetings Act.

PASSED AND APPROVED on the 6th day of January, 2022.

ATTEST:

Dara Crabtree

Dara Crabtree, City Secretary

THE CITY OF LEANDER, TEXAS

C. deLisle

Christine DeLisle, Mayor

AN ORDINANCE OF THE CITY OF LEANDER, TEXAS

ORDINANCE NO. 22-006-00

AN ORDINANCE OF THE CITY OF LEANDER, TEXAS, AMENDING CHAPTER 13 OF THE CODE OF ORDINANCES BY ADDING ARTICLE 13.12 ENTITLED "DEVELOPMENT PHASING"; REQUIRING A DEVELOPMENT PHASING PLAN TO BE APPROVED BEFORE A SUBDIVISION CONCEPT PLAN CAN BE APPROVED; ESTABLISHING REQUIREMENTS FOR DEVELOPMENT PHASING PLANS; PROVIDING AN APPROVAL PROCESS; AMENDING CONFLICTING ORDINANCES; PROVIDING FOR SEVERABILITY; AND PROVIDING EFFECTIVE DATE AND OPEN MEETINGS CLAUSES.

WHEREAS, the City of Leander, Texas, a home rule municipality (the "City") owns and operates a municipal water utility and is a member of the Brushy Creek Regional Utility Authority;

WHEREAS, the current water treatment capacity of the City's water system is 25 MGD;

WHEREAS, the City has experienced unprecedented growth rates and growth is projected to continue at a high rate;

WHEREAS, the City and the BCRUA have several major capital improvement projects planned or in progress, which are projected to be completed over the course of the next eight years, which will increase the capacity of the City's water system to 44 MGD;

WHEREAS, given the rate of growth and the timing of construction of the water infrastructure projects, the City finds that it is reasonable and necessary to adopt regulations that assist the City with tracking and managing the number of LUE's added to the water system in the years leading up to completion of the water infrastructure projects, to ensure that growth does not exceed the water system capacity and that the City is able to meet peak demands during periods of high water usage;

WHEREAS, the City is authorized under its home rule authority, its general police powers, and Sections 551.007 and 552.001, Texas Local Government Code to adopt the regulations set forth in this Ordinance; and

WHEREAS, the City Council finds the regulations set forth herein to be reasonable and necessary to ensure the adequate provision of water to current and future customers in accordance with the City's ordinance and applicable law;

NOW, THEREFORE, BE IT ORDAINED BY THE CITY COUNCIL OF THE CITY OF LEANDER, TEXAS, THAT:

Section 1. Findings of Fact. The above and foregoing recitals are hereby found to be true and correct and are incorporated herein as findings of fact. The City Council hereby further finds and determines that the rules, regulations, terms, conditions, provisions and requirements of this ordinance are reasonable and necessary to protect the public health, safety and quality of life.

Section 2. Phasing Plan Required. Chapter 13, City of Leander Code of Ordinances, is hereby amended to add Article 13.12, entitled "Development Phasing Plan" to read as follows:

ARTICLE 13.12. DEVELOPMENT PHASING PLAN

Sec. 13.12.001. Purpose.

(a) The purpose of this Article is to ensure that growth occurs in an orderly and planned manner that allows the City to manage the number of living unit equivalents added to the water system in the years leading up to completion of several major water infrastructure projects, to ensure that growth does not exceed the water system capacity, that the City is able to meet peak demands during periods of high water usage, and that the City's water system continues to be able to serve existing and future customers during expansion of the water system.

(b) The City Council shall review this Article at least annually, and after completion of the Phase 2A of the Brushy Creek Regional Water Treatment Plant, which is projected to be completed in 2027, to determine whether this Article should be modified or repealed.

Sec. 13.12.002. Development Phasing Plan Required.

A Development Phasing Plan is required for any subdivision within the city limits and extraterritorial jurisdiction that includes more than thirty (30) lots or units. The Development Phasing Plan for the subdivision must be approved by the City Council before a subdivision concept plan will be approved.

Sec. 13.12.003. Approval Procedure.

(a) Persons wishing to obtain approval of a subdivision that includes more than thirty (30) lots or units shall submit a proposed Development Phasing Plan to the with the Concept Plan Application.

(b) The Development Phasing Plan shall comply with the following requirements and shall be in the form required by the City:

(1) The Development Phasing Plan shall contain timeframes in compliance with the term of the concept plan.

(2) Phases shall be provided in sequential order and include any proposed subsections.

(3) Each phase shall illustrate the property to be included in a specific phase, and

the number of LUE's that will be served by the City's water system in each phase. The phases shall include all required infrastructure and drainage facilities to support the phase without the development of the entire subdivision, and infrastructure for each phase shall fully serve each phase.

(4) Phases shall not create remnant tracts less than five (5) acres in size.

(c) The Planning Department will cause the Development Phasing Plan to be reviewed by appropriate City departments, including the City Engineer, in accordance with criteria established by the Planning Director and the City Engineer. Applications will be reviewed in accordance with the submittal and review schedule prepared by the planning director and approved by the planning commission. Incomplete Development Phasing Plans will be rejected with a comment letter identifying the deficiencies.

(d) After completion of staff review, the Planning Director and the City Engineer will approve, deny, or recommend modifications to the Development Phasing Plan.

(e) A person aggrieved by a decision made by the Planning Director and City Engineer under this Section may appeal the decisions to the City Council by submitting a written request for appeal and setting forth the basis for the appeal within fourteen (14) calendar days of the date of the decision.

Sec. 13.12.004. Compliance with Proposed Phasing Plan.

A subdivision shall be constructed in compliance with the sequencing set forth in the Development Phasing Plan. If an applicant applies for a Preliminary Plat for less than the entire property shown in the Concept Plan, the Preliminary Plat for each phase may not be reviewed concurrently, must be submitted in the order shown on the approved Phasing Plan, and review of the Preliminary Plat for a particular phase must be completed and scheduled for Commission approval before a subsequent phase may be submitted for review. In addition, and the Preliminary Plat applications must contain the property shown in each phase of the approved Development Phasing Plan. Construction Plans for each phase shall be submitted in accordance with the phasing shown on the approved Phasing Plan, may not be reviewed concurrently, and must be submitted in the order shown on the approved Development Phasing Plan. The infrastructure in an approved Construction Plan for a particular phase set must be completed and accepted by the City before the applicant may commence construction a subsequent phase of the subdivision.

Sec. 13.12.005. Amendment of Phasing Plan.

An approved Development Phasing Plan may be amended by submission of a proposed amended Development Phasing Plan using the process set forth in Section 13.12.002.

Section 4. Amendment of Conflicting Ordinances. All ordinances or parts of ordinances inconsistent with or in conflict with this ordinance are hereby repealed to the extent of such inconsistency or conflict.

Section 5. Effective Date. This ordinance shall take effect immediately from and after its passage in accordance with the provisions of the Tex. Loc. Gov't. Code and the City Charter.

Section 6. Severability. It is hereby declared to be the intention of the City Council that the sections, paragraphs, sentences, clauses and phrases of this Ordinance are severable and, if any phrase, sentence, paragraph or section of this Ordinance should be declared invalid by the final judgment or decree of any court of competent jurisdiction, such invalidity shall not affect any of the remaining phrases, clauses, sentences, paragraphs and sections of this Ordinance, since the same would have been enacted by the City Council without the incorporation of this ordinance of any such invalid phrase, clause, sentence, paragraph or section. If any provision of this Ordinance shall be adjudged by a court of competent jurisdiction to be invalid, the invalidity shall not affect other provisions or applications of this Ordinance which can be given effect without the invalid provision, and to this end the provisions of this Ordinance are declared to be severable.

Section 7. Open Meetings. It is hereby officially found and determined that the meeting at which this ordinance is passed was open to the public as required and that public notice of the time, place and purpose of said meeting was given as required by the Open Meetings Act.

PASSED AND APPROVED on the 6th day of January, 2022.

ATTEST:

Dara Crabtree

Dara Crabtree, City Secretary

CITY OF LEANDER, TEXAS

C. DeLisle

Christine DeLisle, Mayor

CITY OF LEANDER
ESTABLISHED 1887
INCORPORATED 1908
STATE OF TEXAS